Technical data sheet

Extension unit for GES6, height 100−150 mm

Item number: 7424922

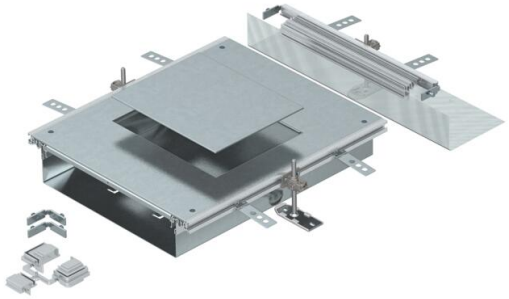

Ready-to-mount trunking extension unit with a device installation lid for the installation of a flush-mount unit of nominal size 6, consisting of the trunking base (floor trough with side and floor covering contact profiles), trunking lid with blank mounting opening and a flushfloor end cover. The scope of delivery contains 3 height-adjustable fixing brackets, 3 screed anchors, 1 lid butt support and 1 construction set for 90° angle.
Size of the mounting unit suitable for the installation of a rectangular installation unit of nominal size 6.

St	Steel
FS	Strip galvanised

Master data

Item number	7424922
Type	OKA-W A 10050 6
Description 1	Extension unit
Description 2	for OKA-W
Manufacturer	OBO
Material	Steel
Surface	Strip galvanised
Surface standard	DIN EN 10346
Smallest sales unit	1
Unit of quantity	Piece
Weight	951 kg
Weight unit	kg/100 pc.
CO2 Footprint (GWP) Cradle-to-Gate	48,0699 kg CO2e / 1 Piece

Technical data sheet

Extension unit for GES6, height 100−150 mm

Item number: 7424922

Dimensions

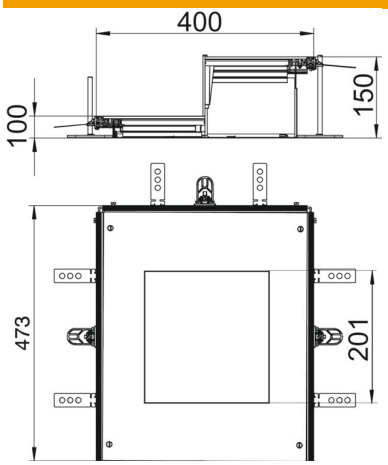

Length	473 mm
Width	400 mm
Dimension a	201 mm
Dimension A	400 mm
Dimension b	253 mm
Dimension h	100 mm

Technical data

Mounting opening cover	yes
Covers	1
Number of mounting openings	1
Cover fastening, locking	no
Seal installation option	yes
Installation opening for on-floor tank	no
Installation opening for flush-mount unit	Rectangular
Decouplable	no
Suitable for expansion joint	no
Suitable for screed-flush closed underfloor ducts	no
Suitable for flushfloor, open underfloor trunking	yes
Suitable for screed-covered underfloor ducts	no
Trunking height, max.	150 mm
Duct height, min.	100 mm
Cover material thickness	4
Minimum screed height	100
With connection opening	yes
With equipotential bonding	no
With separating retainer	no
With overhang	yes
Mounting opening	For service outlet
Nominal size for device installation units	6
Height-adjustment range, max.	150 mm
Height-adjustment range, min.	100 mm
Removable cover	yes
ROHS-conformant	Exempt