Technical data sheet

Extension unit for GES4, height 40−240 mm

Item number: 7424340

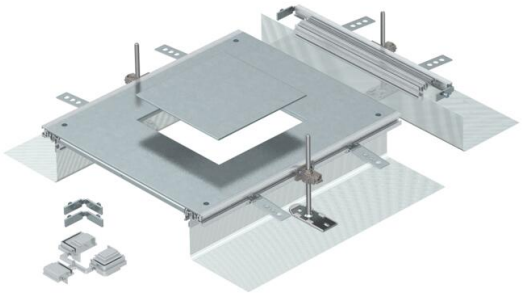

Ready for mounting trunking extension unit with a device installation lid for the installation of a flush-mount unit of nominal size 4, consisting of side profiles with attached flexible side wall made of metal mesh, floor covering contact profiles, trunking lid with blank, closed mounting opening and a trunking end piece. The scope of delivery contains 3 height-adjustable fixing brackets, 3 screed anchors, 1 lid butt support (without levelling unit − please order separately) and 1 construction set for 90° angle.

Size of the mounting unit suitable for the installation of a square installation unit of nominal size 4.

St	Steel
FS	Strip galvanised

Master data

Item number	7424340
Type	OKA-G A 40240 4
Description 1	Extension unit
Description 2	for service unit GES5
Manufacturer	OBO
Material	Steel
Surface	Strip galvanised
Surface standard	DIN EN 10346
Smallest sales unit	1
Unit of quantity	Piece
Weight	880 kg
Weight unit	kg/100 pc.
CO2 Footprint (GWP) Cradle-to-Gate	43,8181 kg CO2e / 1 Piece

Technical data sheet

Extension unit for GES4, height 40−240 mm

Item number: 7424340

Dimensions

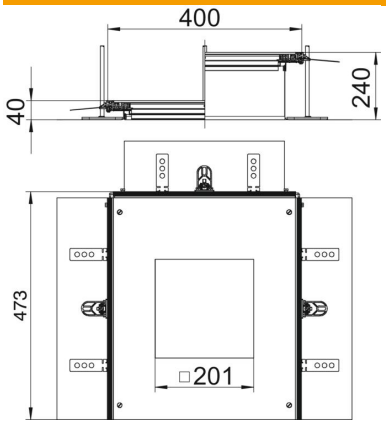

Length	460 mm
Width	400 mm
Dimension a	201 mm
Dimension A	400 mm
Dimension h	40 mm

Technical data

Mounting opening cover	yes
Covers	1
Number of mounting openings	1
Floor plate	no
Cover fastening, locking	no
Seal installation option	yes
Installation opening for on-floor tank	no
Installation opening for flush-mount unit	Square
Decouplable	no
Suitable for expansion joint	no
Suitable for screed-flush closed underfloor ducts	no
Suitable for flushfloor, open underfloor trunking	yes
Suitable for screed-covered underfloor ducts	no
Trunking height, max.	240 mm
Duct height, min.	40 mm
Cover material thickness	4
Minimum screed height	40
With connection opening	yes
With equipotential bonding	no
With separating retainer	no
With overhang	yes
Mounting opening	For service outlet
Nominal size for device installation units	4
Height-adjustment range, max.	240 mm
Height-adjustment range, min.	40 mm
Removable cover	yes
ROHS-conformant	Exempt