Technical data sheet

Construction set for 90° angle to right, height 40−240 mm

Item number: 7423984

For the construction-side creation of a trunking junction as a 90° angle, T-piece or crossing. A flushfloor end cover is also required for the creation of a 90° angle (order separately). Suitable for the OKA-G and OKA-W trunking systems.

St	Steel
FS	Strip galvanised

Master data

Item number	7423984
Type	OKA-G40040240FBR
Description 1	Branch, right
Description 2	for OKA-G and OKA-W
Manufacturer	OBO
Material	Steel
Surface	Strip galvanised
Surface standard	DIN EN 10346
Smallest sales unit	1
Unit of quantity	Piece
Weight	81.7 kg
Weight unit	kg/100 pc.
CO2 Footprint (GWP) Cradle-to-Gate	7,2953 kg CO2e / 1 Piece

Technical data sheet

Construction set for 90° angle to right, height 40−240 mm

Item number: 7423984

Dimensions

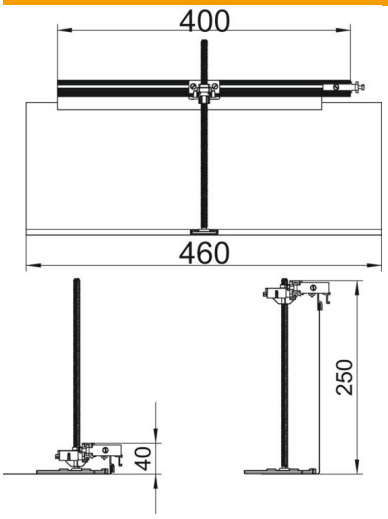

Length	460 mm
Width	400 mm

Technical data

Mounting opening cover	no
Floor plate	no
Cover fastening, locking	no
Seal installation option	no
Installation opening for on-floor tank	no
Decouplable	no
Function	Branch
Suitable for expansion joint	no
Suitable for screed-flush closed underfloor ducts	no
Suitable for flushfloor, open underfloor trunking	no
Suitable for screed-covered underfloor ducts	no
Trunking height, max.	240 mm
Duct height, min.	40 mm
Minimum screed height	40
With connection opening	no
With equipotential bonding	no
With separating retainer	no
With overhang	yes
Height-adjustment range, max.	200 mm
Height-adjustment range, min.	0 mm
Removable cover	no
ROHS-conformant	Exempt