Technical data sheet

Height-compensation kit ASH 250-4 320

Item number: 7410136

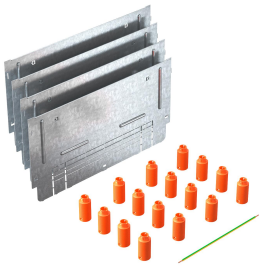

Height-compensation kit for UZD250-4 underfloor boxes with a construction height of 240 to 320 mm for construction-side raising of the UZD.

St Steel

FS Strip galvanised

Master data

Item number	7410136
Type	ASH 250-4 320
Description 1	Height compensation set
Description 2	for UZD 250-4
Manufacturer	OBO
Dimension	353x183x46
Material	Steel
Surface	Strip galvanised
Surface standard	DIN EN 10346
Smallest sales unit	1
Unit of quantity	Packaging unit
Weight	172 kg
Weight unit	kg/100 PUs
CO2 Footprint (GWP) Cradle-to-Gate	5,5485 kg CO2e / 4 Piece

Technical data sheet

Height-compensation kit ASH 250-4 320

Item number: 7410136

Dimensions

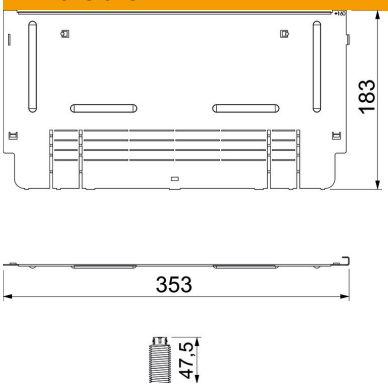

Length	353 mm
Width	183 mm
Dimension A	353 mm
Dimension B	183 mm
Dimension l	47.5 mm

Technical data

Version for	Square
Floor plate	no
Lowerable to be flush-floor	no
Seal installation option	no
Installation opening for on-floor tank	no
Decouplable	no
Screed height, max.	320 mm
Screed height, min.	240 mm
For pipe connection	no
Suitable for raised floor installation	no
Suitable for screed-flush closed underfloor ducts	no
Suitable for screed-covered underfloor ducts	yes
Suitable for cavity floor installation	no
Suitable for underfloor ducts	no
Trunking width, max.	250 mm
Trunking width, min.	190 mm
Minimum screed height	240
Height-adjustment range, max.	320 mm
Height-adjustment range, min.	240 mm
ROHS-conformant	yes