Technical data sheet

UZD250-4 SO junction and branch box

Item number: 7410010

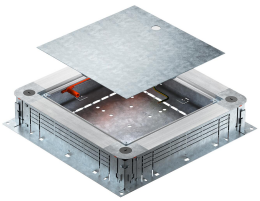

Junction and branch box for screed-covered underfloor installation duct with sheet steel side walls. For mounting of installation units in the mounting cover (to be ordered separately). Can be infinitely adjusted to a nominal screed height of 115–160 mm using the quick height-adjustment unit. The screed can be worked up to be flush with the screed draw-off edge. With noise decoupling option after screed laying and can also be used with system accessories for heavy-duty applications. Insertion of cables with the 2-part EÜK duct.

St Steel

FS Strip galvanised

Master data

Item number	7410010
Type	UZD250-4 SO
Description 1	Junction and branch box
Description 2	for screed height 115-160 mm
Manufacturer	OBO
Dimension	400x380x80
Material	Steel
Surface	Strip galvanised
Surface standard	DIN EN 10346
Smallest sales unit	1
Unit of quantity	Piece
Weight	466 kg
Weight unit	kg/100 pc.

Technical data sheet

UZD250-4 SO junction and branch box

Item number: 7410010

Dimensions

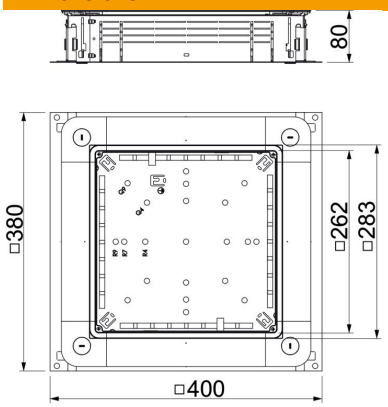

Length	380 mm
Width	400 mm
Height	80 mm
Dimension a	262 mm
Dimension A	380 mm
Dimension B	400 mm
Dimension b	283 mm

Technical data

Number of installable devices	1
Floor plate	yes
Cover version	Universal
Seal installation option	yes
Installation opening for on-floor tank	no
Installation opening for flush-mount unit	Square
Decouplable	yes
Screed height, max.	160 mm
Screed height, min.	115 mm
For pipe connection	no
Suitable for screed-flush closed underfloor ducts	no
Suitable for screed-covered underfloor ducts	yes
Suitable for underfloor ducts	yes
Trunking width, max.	250 mm
Trunking width, min.	190 mm
Trunking height, max.	58 mm
Duct height, min.	28 mm
Minimum screed height	115
Nominal size	250 mm
Height-adjustment range, max.	160 mm
Height-adjustment range, min.	115 mm
Protection rating (IP) when used	IP20