Technical data sheet

Height-adjustable cassette for tube body, RKFR, stainless steel

Item number: 7409424

Height-adjustable cassette of nominal size R4 for tube body for installation of accessories in dry or wet-cleaned floors for indoor use.
Height-adjustable cassette for tube body, 2-compartment. 2 APMT2 cover plates can be installed. For the installation of two UT3 universal supports for four single accessories with support ring/support clamp or six Modul 45 devices. The tube body is not contained in the scope of delivery.

A2 Stainless steel

Master data

Item number	7409424
Type	RKFRN2 R4 VS25
Description 1	Round cassette
Description 2	for tube
Manufacturer	OBO
Dimension	Ø215mm
Material	Stainless steel 1.4301
Smallest sales unit	1
Unit of quantity	Piece
Weight	220 kg
Weight unit	kg/100 pc.
CO2 Footprint (GWP) Cradle-to-Gate	12,4754 kg CO2e / 1 Piece

Technical data sheet

Height-adjustable cassette for tube body, RKFR, stainless steel

Item number: 7409424

Dimensions

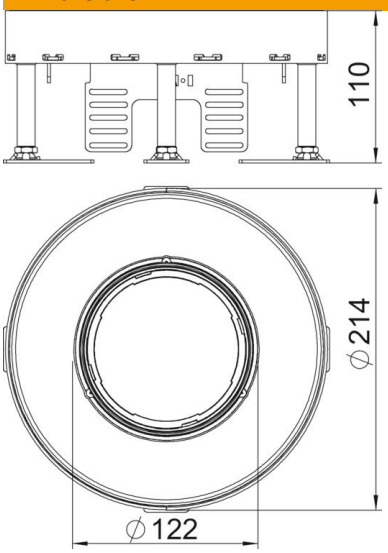

Length	214 mm
Width	214 mm

Technical data

Number of installable devices	6
Number of mounting boxes	2
Number of cable outlets	1
Cover version	Round
Cable outlet version	Lowerable tube body
Floor care	Wet
Decouplable	no
Floor height, max.	155 mm
Floor height, min.	110 mm
Suitable for raised floor installation	yes
Suitable for cavity floor installation	yes
Suitable for underfloor box	250/350
Device support to accept mounting boxes	yes
Nominal size for device installation units	R4
Height-adjustment range, max.	155 mm
Height-adjustment range, min.	110 mm
ROHS-conformant	Exempt
Protection rating (IP) when used	IP20
Protection rating (IP) when unused	IP44
Protection rating IK code	IK10
Heavy-duty version	no
Installation system type	UT3
Vertical load, large area	to 5,000 N
Vertical load, small area	to 3,000 N
Approvals	VDE
Floor covering thickness	25 mm