Technical data sheet

Frame cassette for tube body, RKF, nominal size 250-3, stainless steel
Item number: 7409406

Frame cassette for tube body, for UZD250-3, for the installation of accessories in dry or wet-cleaned floors in interior areas. The tube body is not contained in the scope of delivery.

A2 Stainless steel

Master data

Item number	7409406
Type	RKF3 V2 20
Description 1	Frame cassette
Description 2	for tube
Manufacturer	OBO
Dimension	283x283x20
Material	Stainless steel 1.4301
Smallest sales unit	1
Unit of quantity	Piece
Weight	415.7 kg
Weight unit	kg/100 pc.
CO2 Footprint (GWP) Cradle-to-Gate	19,3264 kg CO2e / 1 Piece

Technical data sheet

Frame cassette for tube body, RKF, nominal size 250-3, stainless steel
Item number: 7409406

Dimensions

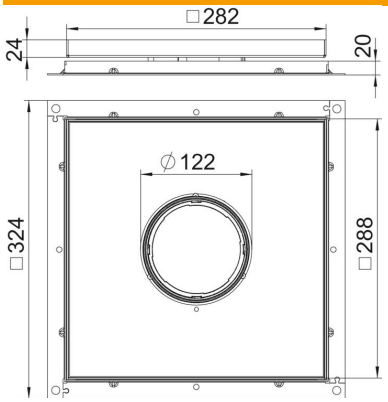

Dimension A	324 mm
Dimension B	288 mm
Dimension C	282 mm
Dimension h	20 mm

Technical data

Number of cable outlets	1
Cable outlet version	Lowerable tube body
Floor care	Wet
Suitable for	Underfloor socket structure
Suitable for underfloor box	250
Device support to accept mounting boxes	no
ROHS-conformant	yes
Protection rating (IP) when used	IP20
Protection rating (IP) when unused	IP44
Vertical load, large area	to 3,000 N
Vertical load, small area	to 3,000 N
Floor covering thickness	18 mm