Technical data sheet

Height-adjustable cassette for tube body, RKFNUZD3, stainless steel
Item number: 7409374

Height-adjustable cassette, decoupled from the floor, of nominal size 4, for tube bodies, for the installation of accessories in dry or wet-cleaned floors for indoor use, for mounting in underfloor boxes UZD250 or UZD350, either in conjunction with a mounting lid DUG../4 or in UGD250-3/4 or UGD350-3/4. Mounting takes place using height adjustment brackets (order separately) in the aluminium frame profile of the underfloor boxes.
Height-adjustable cassette for tube body, 2-compartment. 2 APMT2 cover plates can be installed. For the installation of two UT3 universal supports for four single accessories with support ring/support clamp or six Modul 45 devices. The tube body is not contained in the scope of delivery.

A2 Stainless steel

Master data

Item number	7409374
Type	RKFN2 UZD3 4VS25
Description 1	Square cassette
Description 2	for tube
Manufacturer	OBO
Dimension	200x200mm
Material	Stainless steel 1.4301
Smallest sales unit	1
Unit of quantity	Piece
Weight	202 kg
Weight unit	kg/100 pc.
CO2 Footprint (GWP) Cradle-to-Gate	15,6503 kg CO2e / 1 Piece

Technical data sheet

Height-adjustable cassette for tube body, RKFNUZD3, stainless steel

Item number: 7409374

Dimensions

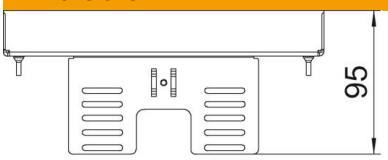

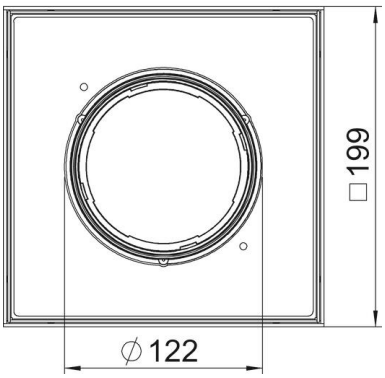

Length	199 mm
Width	199 mm
Height	95 mm
Dimension h	95 mm

Technical data

Number of installable devices	6
Number of cable outlets	1
Cover version	Square
Cable outlet version	Lowerable tube body
Floor care	Wet
Decouplable	yes
Floor height, min.	110 mm
Suitable for raised floor installation	yes
Suitable for cavity floor installation	yes
Suitable for underfloor box	250/350
Device support to accept mounting boxes	no
Length of installation dimensions	201 mm
Nominal size for device installation units	4
ROHS-conformant	yes
Protection rating (IP) when used	IP20
Protection rating (IP) when unused	IP44
Protection rating IK code	IK10
Heavy-duty version	no
Installation system type	UT3
Vertical load, large area	to 3,000 N
Vertical load, small area	to 3,000 N
Approvals	VDE
Floor covering thickness	25 mm