Technical data sheet

Height-adjustable cassette with cord outlet, RKSNUZD3, stainless steel
Item number: 7409240

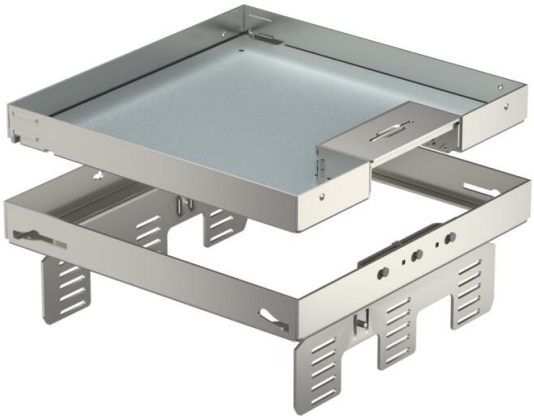

Height-adjustable cassette, decoupled from the floor, of nominal size 9, with cord outlet, for the installation of accessories in dry-cleaned floors indoors, for mounting in underfloor boxes UZD250 or UZD350, either in conjunction with a mounting cover DUG../9 or in UGD250-3/9 or UGD350-3/9. Mounting takes place using height-adjustment brackets (order separately) in the aluminium frame profile of the underfloor boxes.
Height-adjustable cassette for cord outlet, 3-compartment. 3 APMT5 cover plates can be installed. For the installation of 3 UT4 universal supports for 9 individual installation devices with support ring/support clamp or 12 Modul 45 devices.

A2 Stainless steel

Master data

Item number	7409240
Type	RKSN2 UZD3 9VS25
Description 1	Square cassette
Description 2	with cord outlet
Manufacturer	OBO
Dimension	243x243mm
Material	Stainless steel 1.4301
Smallest sales unit	1
Unit of quantity	Piece
Weight	346 kg
Weight unit	kg/100 pc.
CO2 Footprint (GWP) Cradle-to-Gate	21,9883 kg CO2e / 1 Piece

Technical data sheet

Height-adjustable cassette with cord outlet, RKSNUZD3, stainless steel
Item number: 7409240

Dimensions

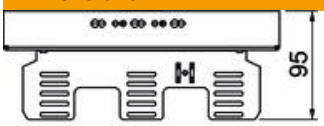

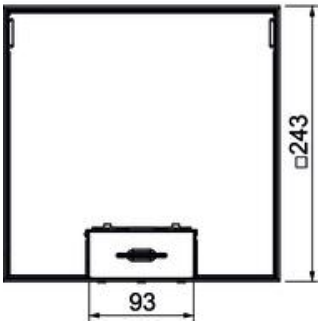

Length	243 mm
Width	243 mm
Height	95 mm
Dimension h	95 mm

Technical data

Number of installable devices	12
Number of mounting boxes	3
Number of cable outlets	1
Cover version	Square
Cable outlet version	Swivellable cord outlet
Floor care	Dry
Decouplable	yes
Floor height, min.	110 mm
Suitable for raised floor installation	yes
Suitable for cavity floor installation	yes
Suitable for underfloor box	250/350
Device support to accept mounting boxes	yes
Length of installation dimensions	244 mm
Nominal size for device installation units	9
Standard	EN 50085-2-2
ROHS-conformant	yes
Protection rating (IP) when used	IP20
Protection rating (IP) when unused	IP40
Protection rating IK code	IK10
Heavy-duty version	no
Installation system type	UT4
Vertical load, large area	to 3,000 N
Vertical load, small area	to 3,000 N
Approvals	VDE
Floor covering thickness	25 mm