# Technical data sheet

## Height-adjustable cassette for inspection opening, RKR-NUZD3, brass
## Item number: 7409144

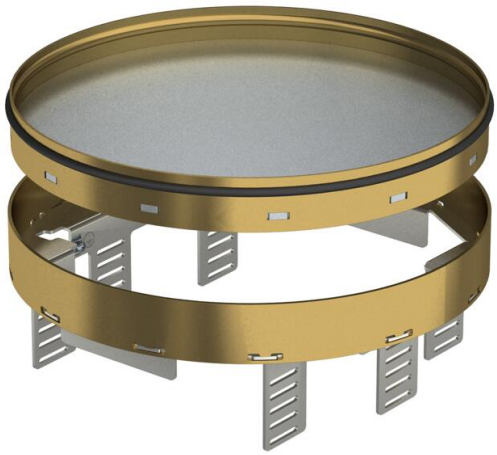

Height-adjustable "blank" cassette, decoupled from the floor, for the creation of an inspection opening of nominal size R7 in dry or wet-cleaned floors for indoor use, for mounting in underfloor boxes UZD350-3, either in conjunction with a blanking lid DUG350-3R7 or in UGD250-3R7. Mounting takes place using levelling profiles (order separately) in the aluminium frame profile of the underfloor boxes. Only suitable for smooth floor coverings.
Height-adjustable cassette as a blind cassette, 3-compartment. 2 APMT2 cover plates and 1 APMT5 cover plate can be installed. For the installation of 2 UT3 universal supports and one UT4 universal support for 7 individual installation devices with support ring/support clamp or 10 Modul 45 devices.

CuZn 37 Brass

### Master data

| | |
|---|---|
| Item number | 7409144 |
| Type | RKRN2UZD3R7MS25 |
| Description 1 | Round cassette |
| Description 2 | blank |
| Manufacturer | OBO |
| Dimension | Ø275mm |
| Material | Brass |
| Smallest sales unit | 1 |
| Unit of quantity | Piece |
| Weight | 298 kg |
| Weight unit | kg/100 pc. |
| CO2 Footprint (GWP) Cradle-to-Gate | 11,3939 kg CO2e / 1 Piece |

# Technical data sheet

## Height-adjustable cassette for inspection opening, RKR-NUZD3, brass

## Item number: 7409144

### Dimensions

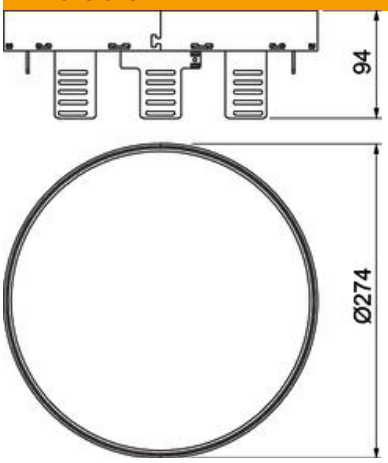


| | |
|---|---|
| Length | 274 mm |
| Width | 274 mm |
| Height | 94 mm |
| Dimension h | 94 mm |

### Technical data

| | |
|---|---|
| Number of installable devices | 0 |
| Number of cable outlets | 0 |
| Cover version | Round |
| Floor care | Wet |
| Decouplable | yes |
| Screed height, min. | 94 mm |
| Floor height, min. | 94 mm |
| Suitable for raised floor installation | no |
| Suitable for cavity floor installation | no |
| Suitable for underfloor box | 350 |
| Device support to accept mounting boxes | no |
| Nominal size for device installation units | R7 |
| ROHS-conformant | yes |
| Protection rating (IP) when used | IP00 |
| Protection rating (IP) when unused | IP44 |
| Protection rating IK code | IK10 |
| Heavy-duty version | no |
| Installation system type | UT3 / UT4 |
| Vertical load, large area | to 3,000 N |
| Vertical load, small area | to 3,000 N |
| Approvals | VDE |
| Floor covering thickness | 25 mm |