Technical data sheet

Mounting support, 2 x type B

Item number: 7407595

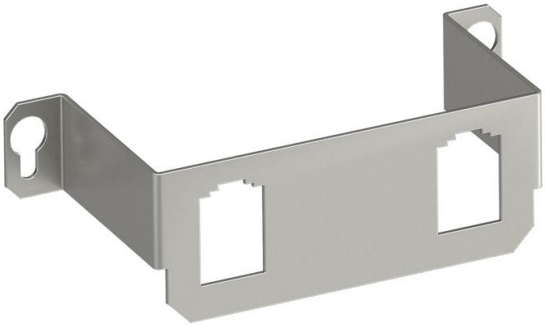

Mounting support to accept two data connection modules of the following types BTR: E-DAT; Dätwyler: MS and MS-N; Kerpen: VarioKeystone.
Dimensions of a mounting opening in mm: 19.35/21.55 x 14.85.
Suitable for GE2 installation unit with floor covering recess.

CE

A2 Stainless steel

Master data

Item number	7407595
Type	MTGE2 15 2B
Description 1	Mounting plate for GE2 16
Description 2	with 2x hole pattern type B
Manufacturer	OBO
Dimension	118x47x34
Material	Stainless steel 1.4301
Smallest sales unit	1
Unit of quantity	Piece
Weight	3.7 kg
Weight unit	kg/100 pc.
CO2 Footprint (GWP) Cradle-to-Gate	0,3871 kg CO2e / 1 Piece

Technical data sheet

Mounting support, 2 x type B

Item number: 7407595

Dimensions

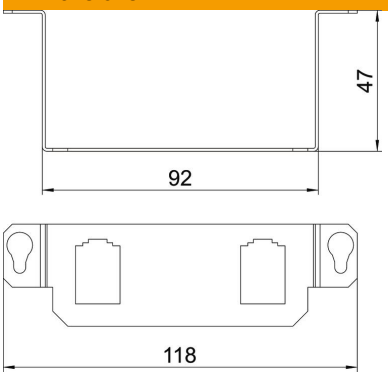

Length	118 mm

Technical data

Version for	Support shape
Fastening type	Lockable
Labelling panel	no
Floor covering protection frame	no
Floor plate	no
Lowerable to be flush-floor	no
Seal installation option	no
Installation opening for on-floor tank	no
Decouplable	no
Suitable for raised floor installation	yes
Suitable for screed-flush closed underfloor ducts	yes
Suitable for screed-covered underfloor ducts	yes
Suitable for cavity floor installation	yes
Suitable for underfloor ducts	yes
With floor covering recess	no
Accessory mounting type	Bolts
ROHS-conformant	yes
Heavy-duty version	no
Depth	47 mm
Strain relief option	yes