Technical data sheet

Heavy-duty frame cassette, blank, RKSL, nominal size 250-3

Item number: 7405948

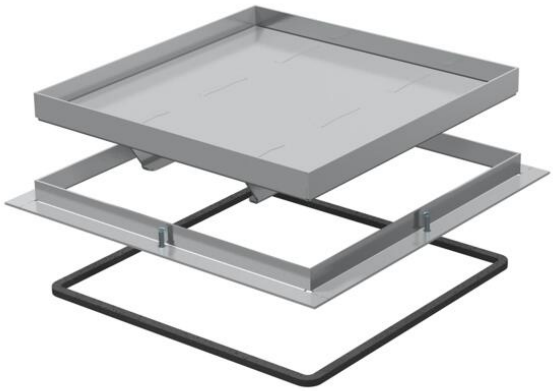

"Blank" heavy-duty frame cassette for the creation of an inspection opening in the UZD250-3 in dry or wet-cleaned floors. Load class 2 to 20 kN. Only suitable for smooth floor coverings for indoor use.

A2 Stainless steel

Master data

Item number	7405948
Type	RK SL2 V2 40
Description 1	Heavy-duty frame cassette
Description 2	blank
Manufacturer	OBO
Dimension	282x282x40
Material	Stainless steel 1.4301
Smallest sales unit	1
Unit of quantity	Piece
Weight	833 kg
Weight unit	kg/100 pc.
CO2 Footprint (GWP) Cradle-to-Gate	32,7873 kg CO2e / 1 Piece

Dimensions

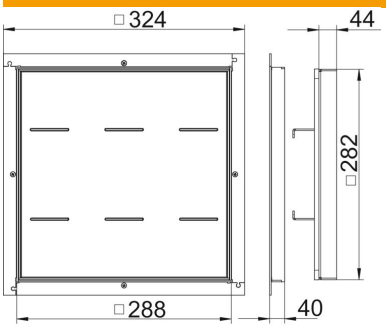

Dimension A	324 mm
Dimension B	288 mm
Dimension C	282 mm
Dimension h	40 mm

Technical data sheet

Heavy-duty frame cassette, blank, RKSL, nominal size 250-3

Item number: 7405948

Technical data

Number of cable outlets	0
Cable outlet version	No cable outlet
Floor care	Wet
Screed height, min.	70 mm
Floor height, min.	110 mm
Suitable for raised floor installation	yes
Suitable for cavity floor installation	yes
Suitable for	Underfloor socket structure
Suitable for underfloor box	250
Device support to accept mounting boxes	no
Length of installation dimensions	290 mm
ROHS-conformant	yes
Protection rating (IP) when used	IP00
Protection rating (IP) when unused	IP44
Protection rating IK code	IK10
Heavy-duty version	yes
Heavy load class	20 kN (OBO SL2)
Floor covering thickness	34 mm