Technical data sheet

Height adjustment unit RKNEV2

Item number: 7405818

For flushfloor height adjustment of the height adjustable cassette units and the OKB screed-flush trunking system. The VPE consists of 4 height adjustment units.
The following table shows the height-adjustment ranges of the height-adjustment units for the cassettes and the OKB trunking system. The stated height-adjustment ranges refer to the top edge of the raw floor to the top edge of the floor covering.

St	Steel
G	Electrogalvanised

Master data

Item number	7405818
Type	RK NEV2 230
Description 1	Height-adjustment unit
Description 2	for cassette and OKB
Manufacturer	OBO
Dimension	M8x230mm
Material	Steel
Surface	Electrogalvanised
Surface standard	EN ISO 19598 / EN ISO 4042
Smallest sales unit	1
Unit of quantity	Packaging unit
Weight	40.634 kg
Weight unit	kg/100 PUs
CO2 Footprint (GWP) Cradle-to-Gate	1,2231 kg CO2e / 4 Piece

Technical data sheet

Height adjustment unit RKNEV2

Item number: 7405818

Dimensions

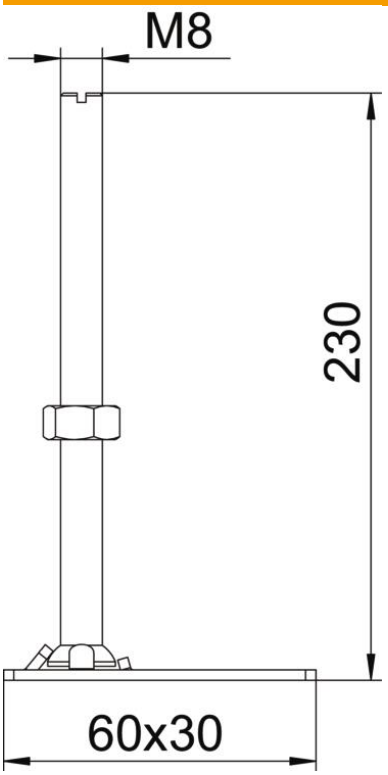

Dimension h	230 mm

Technical data

Type of accessory	Miscellaneous
Height-adjustment range, max.	310 mm
Height-adjustment range, min.	260 mm
ROHS-conformant	Exempt
Suitable for ducts and trunking	yes
Suitable for cassettes	yes
With footfall sound insulation	no
Material of the foot	Metal