Technical data sheet

GRAF9 universal service outlet, wet-cleaned with structured lid

Item number: 7405750

Service outlet with tube body for wet-cleaned floors for up to 12 individual Modul 45 devices in 3 UT4 universal supports, use in duct and trunking systems and system floors indoors.
Up to 9 installation devices can be used with a 50 mm central plate.
Service outlet with tube body for wet cleaned floors, 3-compartment, for the installation of MT9 mounting support. Three type APMT5 cover plates can be installed.

AIG Cast aluminium

Master data

Item number	7405750
Type	GRAF9-2 U 9011
Description 1	Service outlet for wet care
Description 2	with structured lid
Manufacturer	OBO
Dimension	Ø325x74
Colour	Graphite black; RAL 9011
Material	Cast aluminium
Smallest sales unit	1
Unit of quantity	Piece
Weight	246 kg
Weight unit	kg/100 pc.
CO2 Footprint (GWP) Cradle-to-Gate	3,9255 kg CO2e / 1 Piece

Technical data sheet

GRAF9 universal service outlet, wet-cleaned with structured lid

Item number: 7405750

Dimensions

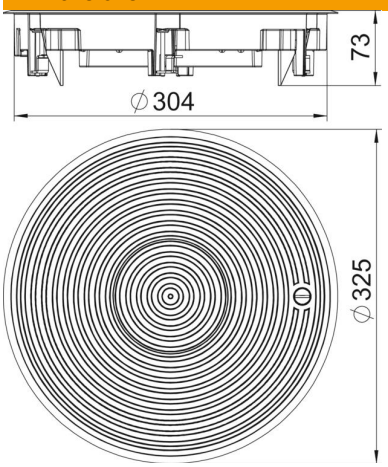

Technical data

Number of installable devices	12
Number of mounting boxes	3
Cover version	Round
Cable outlet version	Lowerable tube body
Floor covering protection frame	yes
Floor care	Wet
Seal installation option	yes
Floor height, min.	80 mm
Suitable for raised floor installation	yes
Suitable for screed-flush closed underfloor ducts	yes
Suitable for screed-covered underfloor ducts	yes
Suitable for cavity floor installation	yes
Suitable for wet care	yes
Suitable for underfloor box	350
Suitable for underfloor ducts	yes
With floor covering recess	no
Nominal size for device installation units	R9
Frame version	Carpet protection frame
ROHS-conformant	yes
Protection rating (IP) when used	IP20
Protection rating (IP) when unused	IP45
Protection rating IK code	IK10
Heavy-duty version	yes
Clamping range D, max.	73 mm
Clamping range D, min.	4 mm
Installation system type	UT4
Vertical load, large area	to 10,000 N
Vertical load, small area	to 3,000 N
Approvals	VDE

Technical data

Opening mechanism	Sash lock