Technical data sheet

GES2DB service outlet with handle clamp

Item number: 7405104

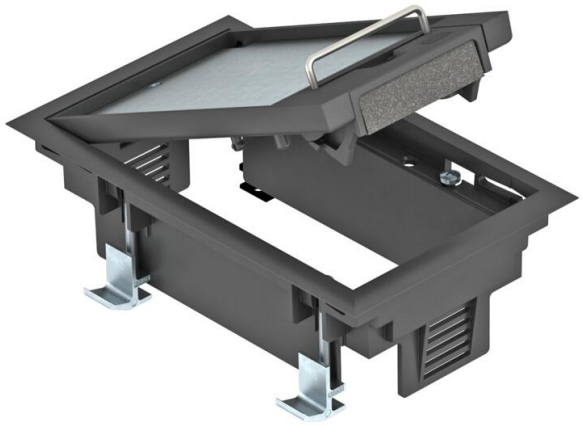

Service outlet with handle clamp for up to 3 individual Modul 45 devices in one UT3 universal support, use in duct systems and system floors for indoor use. Up to two installation devices with 50 mm central plate can be inserted. Service outlet with handle clamp, 1-compartment, for the installation of MT2 mounting support.

PA Polyamide

Master data

Item number	7405104
Type	GES2 DB 9011
Description 1	Service outlet
Description 2	for raised floor mounting
Manufacturer	OBO
Dimension	192x118x91
Colour	Graphite black; RAL 9011
Material	Polyamide
Smallest sales unit	1
Unit of quantity	Piece
Weight	66.4 kg
Weight unit	kg/100 pc.
CO2 Footprint (GWP) Cradle-to-Gate	1,676 kg CO2e / 1 Piece

Technical data sheet

GES2DB service outlet with handle clamp

Item number: 7405104

Dimensions

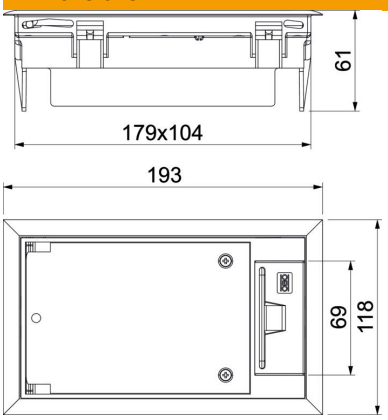

Length	194 mm
Width	118 mm

Technical data

Number of installable devices	3
Number of mounting boxes	1
Cover version	Rectangular
Cable outlet version	Swivellable cord outlet
Cut-out dimensions	180x105 mm
Floor covering protection frame	yes
Floor care	Dry
Seal installation option	no
Floor height, min.	73 mm
Suitable for raised floor installation	yes
Suitable for screed-flush closed underfloor ducts	no
Suitable for screed-covered underfloor ducts	no
Suitable for cavity floor installation	yes
Suitable for wet care	no
Suitable for underfloor box	250
Suitable for underfloor ducts	no
Device support to accept mounting boxes	yes
Length of installation dimensions	180 mm
With floor covering recess	yes
Nominal size for device installation units	2
Frame version	Carpet protection frame
ROHS-conformant	yes
Protection rating (IP) when used	IP20
Protection rating (IP) when unused	IP40
Protection rating IK code	IK08
Heavy-duty version	no
Clamping range D, max.	57 mm
Clamping range D, min.	20 mm
Installation system type	UT3
Vertical load, large area	to 3,000 N

Technical data sheet

GES2DB service outlet with handle clamp

Item number: 7405104

Technical data	
Vertical load, small area	to 3,000 N
Approvals	VDE
Opening mechanism	Handle
Floor covering thickness	5 mm