Technical data sheet

Strain relief on three sides, with mineral wool, internal height 175 mm
Item number: 7215726

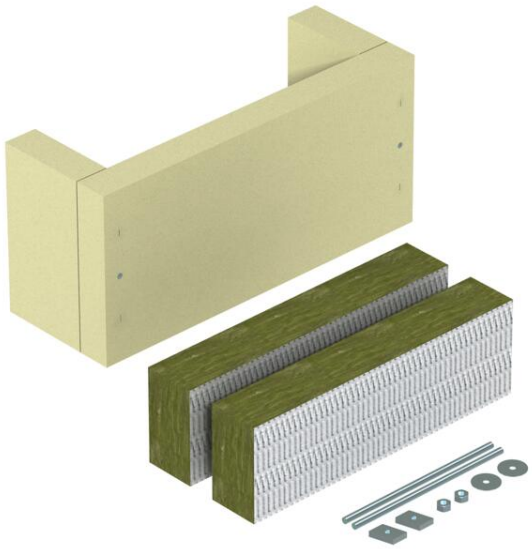

Strain relief as an effective support measure for vertical cable routing, according to DIN 4102 Part 12, approved for all cable types and all vertical routing systems. Maintenance of electrical function classes E30 to E90. Housing including mineral fibre panels, fastening material, ASX fire protection coating in cartridge and identification plate.

Calcium silicate

Master data

Item number	7215726
Type	ZSE90-55-17
Description 1	Strain relief
Description 2	for vertical cable routing
Manufacturer	OBO
Dimension	640x220x160
Colour	Cream; RAL 9001
Material	Calcium silicate
Smallest sales unit	1
Unit of quantity	Piece
Weight	770 kg
Weight unit	kg/100 pc.

Technical data sheet

Strain relief on three sides, with mineral wool, internal height 175 mm
Item number: 7215726

Dimensions

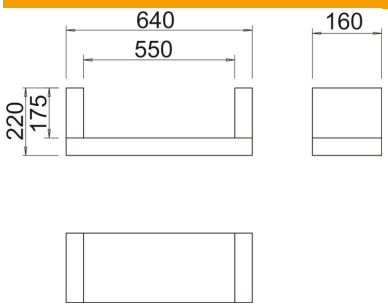

Length	160 mm
Width	640 mm
Height	220 mm
Dimension B	640 mm
Dimension b	550 mm
Dimension H	160 mm
Dimension t	220 mm
Dimension t	175 mm

Technical data

Fire protection version	Soft insulation
Shape	Rectangular
ROHS-conformant	yes
Accessories required	no