Technical data sheet

FireBox T250 with plug-in seals, double terminals

Item number: 7205750

Junction box with ceramic double terminals and soft plug-in seals. Sufficiently large wiring compartment through diagonally arranged connection unit with completely pre-mounted, high-temperature-resistant ceramic terminals. Green-yellow labelled protective conductor terminal. Fastening on easily accessible external flaps. Approved for cable systems that maintain the electrical function according to DIN 4102 Part 12 with the classes E30, E60 and E90. Ceramic clamps have been tested according to DIN EN 60998-2-1:2004.

Including 2 x MMSplus P 6x35 screw ties.

E30 E60 E90 IP 66

PP Polypropylene

Master data

Item number	7205750
Type	T250ED 16-2A
Description 1	Junction box
Description 2	for function maintenance
Manufacturer	OBO
Dimension	240x190x95
Colour	Pastel orange; RAL 2003
Material	Polypropylene
Smallest sales unit	1
Unit of quantity	Piece
Weight	105.679 kg
Weight unit	kg/100 pc.
CO2 Footprint (GWP) Cradle-to-Gate	3,1621 kg CO2e / 1 Piece

Technical data sheet

FireBox T250 with plug-in seals, double terminals

Item number: 7205750

Dimensions

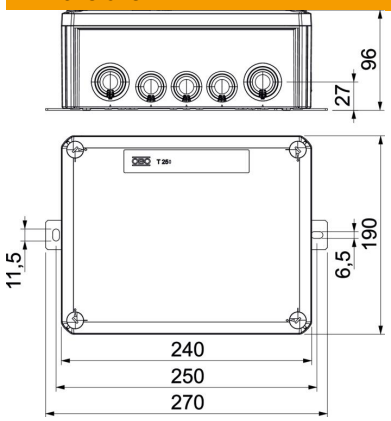

Dimension B	190 mm
Dimension H	95 mm
Dimension L	240 mm
Dimension L1	250 mm
Dimension L2	270 mm

Technical data

Expandable	no
Number of terminals	5
Type of housing penetration	Cuttable stepped membrane
Equipment	Terminal
Cover	Not transparent
Cover fastening	Screwed
Entry from rear	no
Entries	9 x M25 7 x M32
Explosion-tested version	no
Shape	Rectangular
Maintain electrical functions	E 90
For Ex zone	Without
For Ex zone gas	Without
For Ex zone dust	Without
Halogen-free	yes
Clear internal dimensions	225x173x86 mm
With screening	no
with lid	yes
Nominal cross-section, max.	16 mm²
Nominal cross-section, min.	6 mm²
Nominal voltage	660 V
Sealable	no
Impact-resistant	no
Protection rating	IP66
Transparent lid	no
Weatherproof	no