Technical data sheet

Cable gland with locknut as a set

Item number: 7205657

Robust cap nut cable gland with metric connecting thread to IEC 423, including pre-mounted locknut.

For high tightness requirements. Strain relief, torsion protection and tightness over the whole clamping area. Sealing ring made of polychloroprene/acrylonitrile butadiene rubber. Moulded shaped sealing lip on intermediate support, no connection thread sealing ring required.

VDE-tested according to DIN EN 50262, protection rating IP68 at 5 bar for 1 hr.

For maintenance of electrical function according to DIN 4102 Part 12 in connection with the closed junction boxes of the FireBox T series.

Colour: Pastel orange.

PA Polyamide

Master data

Item number	7205657
Type	V-TEC VM16+ OR
Description 1	Cable gland
Description 2	with locknut
Manufacturer	OBO
Dimension	M16
Colour	Pastel orange; RAL 2003
Material	Polyamide
Smallest sales unit	10
Unit of quantity	Piece
Weight	0.771 kg
Weight unit	kg/100 pc.
CO2 Footprint (GWP) Cradle-to-Gate	0,0336 kg CO2e / 1 Piece

Technical data sheet

Cable gland with locknut as a set

Item number: 7205657

Dimensions

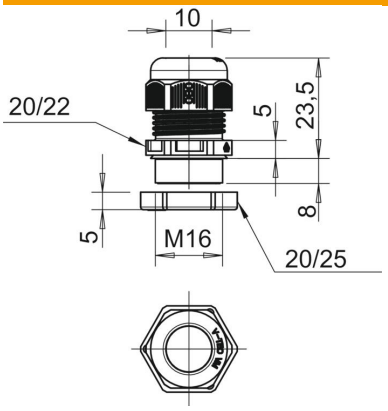

Dimension E1 (mm)	22 mm
Dimension E2	25 mm
Dimension G	M16 x 1,5 mm
Dimension L max.	23.5 mm
Dimension L min.	21.5 mm
Dimension L1	8 mm
Dimension L2	5 mm
Dimension L3	5 mm

Technical data

Bend protection	no
Sealing area D, max.	10 mm
Sealing area D, min.	4.5 mm
Flat cable gland	no
Flame-resistant	acc. to VDE 0471/DIN 695 Part 2-1, test temperature 650°C
For Ex zone	Without
For Ex zone gas	Without
For Ex zone dust	Without
Thread	M16 x 1,5
Thread type	Metric
Thread length	9 mm
Thread increase	1.5 mm
Fibre-glass reinforced	no
Halogen-free	yes
Sealing insert, multiple	no
With locknut	yes
ROHS-conformant	yes
Impact-resistant	no
WAF	20
WAF 1	20 mm
WAF 2	22 mm
Protection rating	IP68
Splittable gland	no
Permitted temperature range, max.	65 °C
Permitted temperature range, min.	-20 °C
Strain relief option	yes