Technical data sheet

US 5 suspended support FT SOMY

Item number: 7193511

Suspended support (U profile) with welded head plate.

For fastening to horizontal concrete ceilings and steel girders. For bracket widths of 400 mm or more, or if the bracket is mounted at the end of a suspended support, we recommend the use of the spacer, type DSK 45.

CE UKCA US5

St Steel

FT SO Hot-dip galvanised 85 µm

Master data

Item number	7193511
Type	US 5 K 50 FT SO
Description 1	Support
Description 2	with welded head plate
Manufacturer	OBO
Dimension	50x50x500
Colour	zinc
Material	Steel
Surface	Hot-dip galvanised 85 µm
Surface standard	DIN EN ISO 1461
Smallest sales unit	1
Unit of quantity	Piece
Weight	161 kg
Weight unit	kg/100 pc.
CO2 Footprint (GWP) Cradle-to-Gate	4,206 kg CO2e / 1 Piece

Technical data sheet

US 5 suspended support FT SOMY

Item number: 7193511

Dimensions

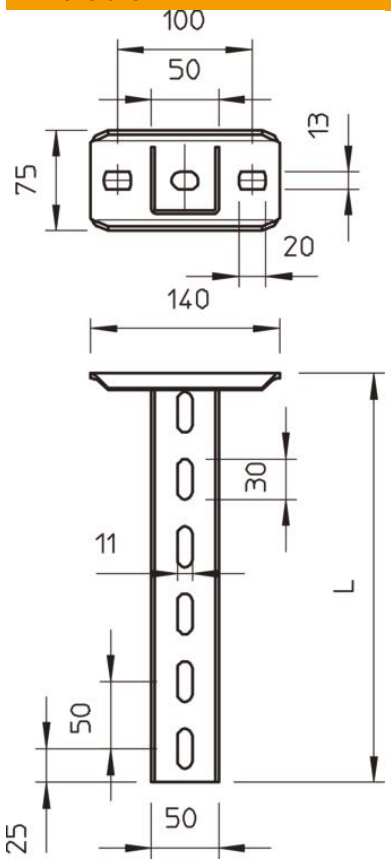

Length	500 mm
Width	50 mm
Height	50 mm

Technical data

Version for	U profile
Bracket length 200	5.75 kN
Bracket length 400	3.1 kN
Bracket length 600	2.2 kN
Maintain electrical functions	no
Material thickness	2.5 mm
Maximum tensile load	10 kN
ROHS-conformant	yes

Technical data sheet

US 5 suspended support FT SOMY

Item number: 7193511

Loads

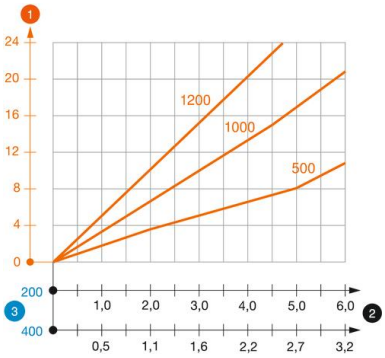

Load diagram, U support, type US 5 K

1. Bending of the end of the suspended support at permitted bracket load
2. Permitted bracket load in kN without man load
3. Bracket length in mm

— Load curves with support lengths in mm

Characteristic anchor load values for US 5 K support

Single-sided load				
	Max. load [kN]			
	Bracket width [mm]			
Anchor type	110%	210	310	410
BZ3 10x90/0-30	4.31	3.18	2.51	2.06
BZ3 12x110/0-35	5.82	4.29	3.39	2.77

Max. total load F = cable weight + cable tray + bracket + suspended support. The tabular values for double-sided loads take the available axis spacing ai = 10 cm into account. The load capacity values increase considerably when used in uncracked concrete. The specified values are based on concrete of resistance grade C20/25. Comply with the installation conditions of the DIBt approval (anchors).