Technical data sheet

Cable ladder LG 60, 6 m VS FT SOMY

Item number: 7188668

Cable ladder with 60 mm side height with riveted C profile rungs which are open in an upwards direction.
The cable ladder is shipped folded up. The surface coating is a coating created in a single-dip method with extra-high zinc thicknesses.
Magnetic shield insulation without cover 10 dB, with cover 15 dB.

EMV EMC | CE | UK CA | 60 | 16-17

St Steel

FT SO Hot-dip galvanised 85 µm

Master data

Item number	7188668
Type	LG 660 VS 6 FTSO
Description 1	Cable ladder
Description 2	perforated, with VS rung
Manufacturer	OBO
Dimension	60x600x6000
Colour	zinc
Material	Steel
Surface	Hot-dip galvanised 85 µm
Surface standard	DIN EN ISO 1461
Smallest sales unit	6
Unit of quantity	Metre
Weight	398.2 kg
Weight unit	kg/100 m
CO2 Footprint (GWP) Cradle-to-Gate	8,6629 kg CO2e / 1 Meter

Technical data sheet

Cable ladder LG 60, 6 m VS FT SOMY

Item number: 7188668

Dimensions

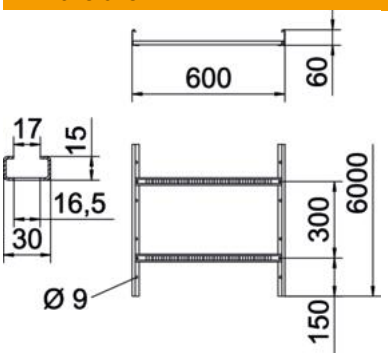

Dimension	60 x 600
Length	6,000 mm
Width	600 mm
Height	60 mm
Dimension B	600 mm
Rung slot dimension	16.50

Technical data

Version of the rungs	Profile perforated
Side rail version	Flat profile
Fastening of rung	Blind riveted
Maintain electrical functions	no
Usable cross-section	298 cm²
Usable cross-section	29800 mm²
ROHS-conformant	yes
Rustproof steel, pickled	no
Side perforation	yes
Rung distance	300 mm
Wide-span version	no
Rail thickness	1.5 mm

Technical data sheet

Cable ladder LG 60, 6 m VS FT SOMY

Item number: 7188668

Loads

Insertable support spacings, min.	1.5 m
Insertable support spacings, max.	5 m
Support spacing 1.5 m	3.1 kN/m
Support spacing 2.0 m	2.25 kN/m
Support spacing 2.5 m	1.5 kN/m
Support spacing 3.0 m	1.1 kN/m
Support spacing 3.5 m	0.75 kN/m
Support spacing 4.0 m	0.45 kN/m
Support spacing 4.5 m	0.3 kN/m
Support spacing 5.0 m	0.15 kN/m

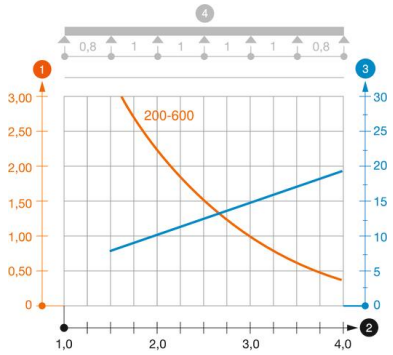

Load diagram, cable ladder, type LG 60 VS

1. Permitted cable tray/ladder load in kN/m without man load
2. Support width in m
3. Rail bend in mm at permitted kN/m
4. Load scheme during testing

— Load curve with cable tray/ladder width in mm

— Strut bend curve according to support width