Technical data sheet

Cover for 90° vertical bend, falling, DD

Item number: 7131632

Cover for falling vertical bends of side height 60 mm.
The fastening is guaranteed by the overlap of the cable tray covers. The cover can also be fastened using cover clamps.

CE

St Steel

DD Strip galvanised zinc/aluminium, Double Dip

Master data

Item number	7131632
Type	DBV 60 100 F DD
Description 1	Cover for 90° vertical bend
Description 2	falling
Manufacturer	OBO
Dimension	B100mm
Colour	zinc
Material	Steel
Surface	Strip galvanised zinc/aluminium, Double Dip
Surface standard	DIN EN 10346
Smallest sales unit	1
Unit of quantity	Piece
Weight	42.1 kg
Weight unit	kg/100 pc.
CO2 Footprint (GWP) Cradle-to-Gate	1,543 kg CO2e / 1 Piece

Technical data sheet

Cover for 90° vertical bend, falling, DD

Item number: 7131632

Dimensions

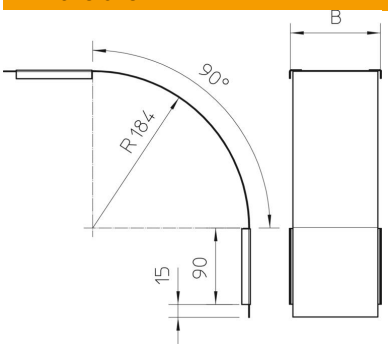

Width	100 mm
Width	4 in
Height	60 mm
Plate thickness	0.03 in
Plate thickness	0.75 mm
Dimension B	100 mm

Technical data

Bend (angle)	90°
Fastening type	Sash lock
Maintain electrical functions	no
Suitable for mesh cable tray	no
Suitable for cable ladder	no
Suitable for cable tray	yes
Change of direction	Vertical, falling
ROHS-conformant	yes
Rustproof steel, pickled	no
Hinged	no