Technical data sheet

Cover for 90° vertical bend 60, falling, A4

Item number: 7130982

Cover for falling vertical bends of side height 60 mm.
The fastening is guaranteed by the overlap of the cable tray covers. The cover can also be fastened using cover clamps.

CE

A4	Stainless steel
2B	Bright, treated

Master data

Item number	7130982
Type	DBV 60 600 F A4
Description 1	Cover for 90° vertical bend
Description 2	falling
Manufacturer	OBO
Dimension	B600mm
Colour	stainless steel
Material	Stainless steel 1.4571
Surface	Bright, treated
Surface standard	
Smallest sales unit	1
Unit of quantity	Piece
Weight	238 kg
Weight unit	kg/100 pc.
CO2 Footprint (GWP) Cradle-to-Gate	16,7962 kg CO2e / 1 Piece

Technical data sheet

Cover for 90° vertical bend 60, falling, A4

Item number: 7130982

Dimensions

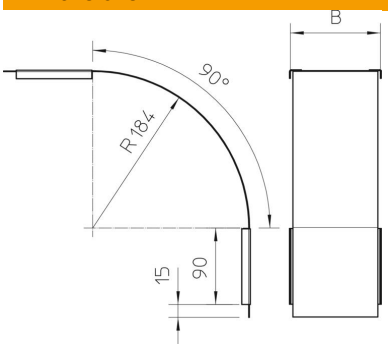

Width	600 mm
Width	24 in
Height	60 mm
Plate thickness	0.03 in
Plate thickness	0.75 mm
Dimension B	600 mm

Technical data

Bend (angle)	90°
Fastening type	Sash lock
Maintain electrical functions	no
Suitable for mesh cable tray	no
Suitable for cable ladder	no
Suitable for cable tray	yes
Change of direction	Vertical, falling
ROHS-conformant	yes
Rustproof steel, pickled	no
Hinged	no