Technical data sheet

Cable ladder with Z rung, standard FT

Item number: 7098140

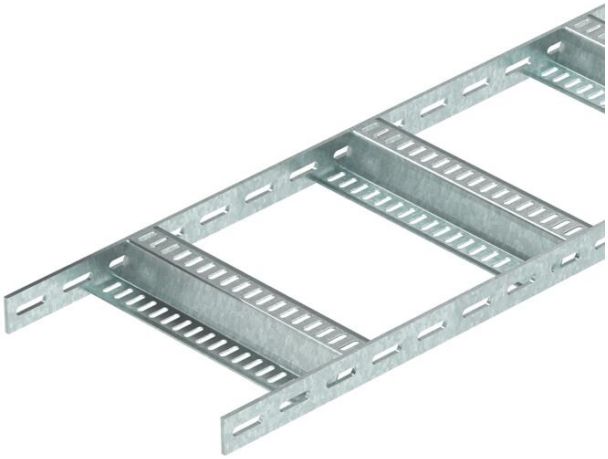

Shipbuilding cable ladder with perforated side rail of side height 40 mm with welded, perforated Z rungs. Load tested according to IEC in conjunction with connector, type SLV.

The shipbuilding cable ladder, including fittings, is also available in stainless steel on request. Powder coating according to RAL colours possible.

St	Steel
FT	Hot-dip galvanised

Master data

Item number	7098140
Type	SLZ 500 FT
Description 1	Cable ladder, shipbuilding
Description 2	with Z-rung
Manufacturer	OBO
Dimension	40x510x3000
Colour	zinc
Material	Steel
Surface	Hot-dip galvanised
Surface standard	DIN EN ISO 1461
Smallest sales unit	3
Unit of quantity	Metre
Weight	554.667 kg
Weight unit	kg/100 m
CO2 Footprint (GWP) Cradle-to-Gate	13,1393 kg CO2e / 1 Meter

Technical data sheet

Cable ladder with Z rung, standard FT

Item number: 7098140

Dimensions

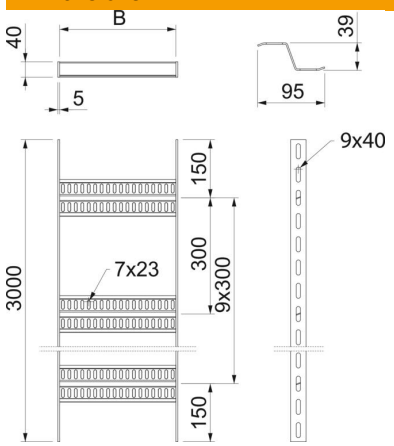

Dimension	40x500
Length	3,000 mm
Width	500 mm
Height	40 mm
Dimension B	510 mm

Technical data

Version of the rungs	Profile perforated
Side rail version	Flat profile
Fastening of rung	Welded
Maintain electrical functions	no
ROHS-conformant	yes
Rustproof steel, pickled	no
Side perforation	yes
Rung distance	300 mm
Wide-span version	no
Rail thickness	5 mm

Loads

Support spacing 1.5 m	2.8 kN/m
Support spacing 2.0 m	1.75 kN/m
Support spacing 2.5 m	1 kN/m
Support spacing 3.0 m	0.6 kN/m

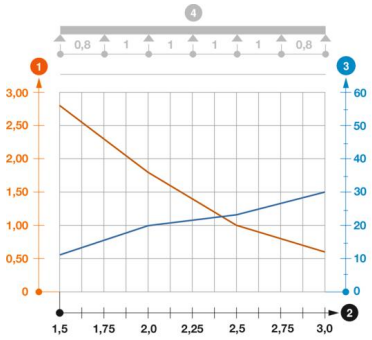

Load diagram, cable ladder, type SLZ

1. Permitted cable tray/ladder load in kN/m without man load
2. Support width in m
3. Rail bend in mm at permitted kN/m
- Load curve with cable tray/ladder width in mm
- Strut bend curve according to support width
4. Load scheme during testing