Technical data sheet

90° adjustable bend, vertical 60 FT

Item number: 7079508

90° adjustable vertical bend, for all cable tray types with a side height of 60 mm. The bend is shipped in an unmounted state. No additional fastening materials are required.

St Steel

FT Hot-dip galvanised

Master data

Item number	7079508
Type	RGBV 650 FT
Description 1	Adjustable bend
Description 2	vertical
Manufacturer	OBO
Dimension	60x500
Colour	zinc
Material	Steel
Surface	Hot-dip galvanised
Surface standard	DIN EN ISO 1461
Smallest sales unit	1
Unit of quantity	Piece
Weight	404 kg
Weight unit	kg/100 pc.
CO2 Footprint (GWP) Cradle-to-Gate	11,7244 kg CO2e / 1 Piece

Technical data sheet

90° adjustable bend, vertical 60 FT

Item number: 7079508

Dimensions

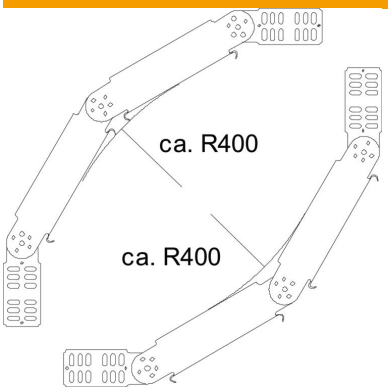

Width	500 mm
Width	20 in
Height	60 mm
Height	2 in
Plate thickness	1 mm
Dimension R	400 mm

Technical data

Bend (angle)	90°
Connector version	Supplied connectors
Type	Adjustable bend_complete
Maintain electrical functions	no
Mounting perforation in base	no
NATO hole pattern	no
Change of direction	Vertical, rising/falling
ROHS-conformant	yes
Rustproof steel, pickled	no
Side perforation	no
Wide-span version	no
Type of connector, cable support system	Screwed