Technical data sheet

Adjustable bend element, vertical 85 FT

Item number: 7076401

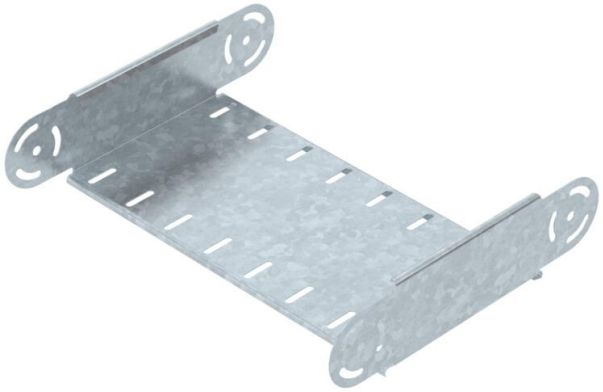

Adjustable vertical bend element, for all cable tray types with a side height of 85 mm.
RGV 85 adjustable connectors should be ordered separately and in the appropriate quantity.

St	Steel
FT	Hot-dip galvanised

Master data

Item number	7076401
Type	RGBEV 840 FT
Description 1	Adjustable bend element
Description 2	vertical
Manufacturer	OBO
Dimension	85x400
Colour	zinc
Material	Steel
Surface	Hot-dip galvanised
Surface standard	DIN EN ISO 1461
Smallest sales unit	1
Unit of quantity	Piece
Weight	142 kg
Weight unit	kg/100 pc.
CO2 Footprint (GWP) Cradle-to-Gate	4,503 kg CO2e / 1 Piece

Technical data sheet

Adjustable bend element, vertical 85 FT

Item number: 7076401

Dimensions

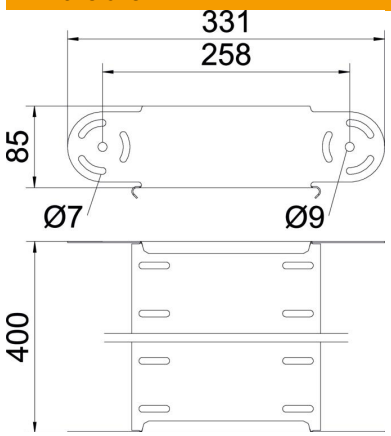

Width	400 mm
Width	16 in
Height	85 mm
Height	3 in
Plate thickness	1 mm
Dimension B	400 mm

Technical data

Bend (angle)	Adjustable
Connector version	Without connectors
Type	Adjustable bend element
Maintain electrical functions	no
Mounting perforation in base	no
NATO hole pattern	no
Change of direction	Vertical, rising/falling
ROHS-conformant	yes
Rustproof steel, pickled	no
Side perforation	no
Wide-span version	no
Type of connector, cable support system	Screwed