Technical data sheet

Adjustable bend element, vertical 60 A4

Item number: 7075677

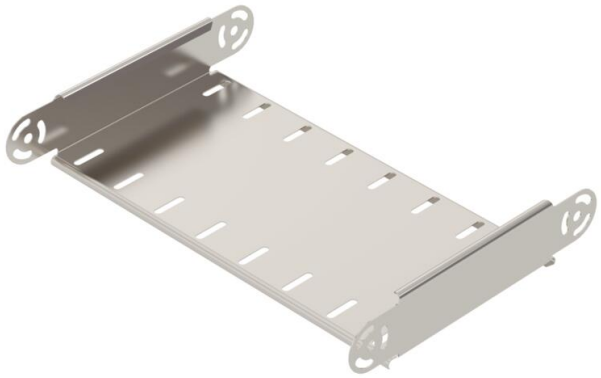

Adjustable vertical bend element, for all cable tray types with a side height of 60 mm.
RGV 60 adjustable connectors should be ordered separately and in the appropriate quantity.
Please order RGV 60 and SKS 8x16 hexagonal bolts separately.

A4 Stainless steel

2B Bright, treated

Master data

Item number	7075677
Type	RGBEV 640 A4
Description 1	Adjustable bend element
Description 2	vertical
Manufacturer	OBO
Dimension	60x400
Colour	stainless steel
Material	Stainless steel 1.4571
Surface Surface standard	Bright, treated
Smallest sales unit	1
Unit of quantity	Piece
Weight	117 kg
Weight unit	kg/100 pc.
CO2 Footprint (GWP) Cradle-to-Gate	9,392 kg CO2e / 1 Piece

Technical data sheet

Adjustable bend element, vertical 60 A4

Item number: 7075677

Dimensions

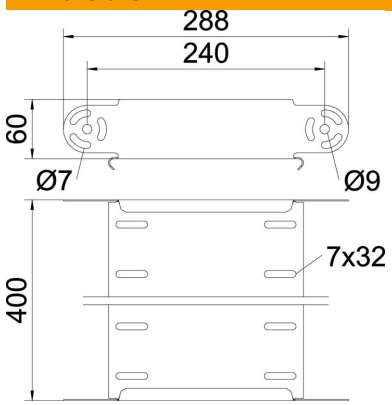

Width	400 mm
Height	60 mm
Plate thickness	1 mm
Dimension B	400 mm

Technical data

Bend (angle)	Adjustable
Connector version	Without connectors
Type	Adjustable bend element
Maintain electrical functions	no
Mounting perforation in base	no
NATO hole pattern	no
Change of direction	Vertical, rising/falling
ROHS-conformant	yes
Rustproof steel, pickled	no
Side perforation	no
Permitted temperature range, max.	120 °C
Permitted temperature range, min.	-20 °C
Wide-span version	no
Type of connector, cable support system	Screwed