# Technical data sheet

## 90° vertical bend, falling 85 FS

## Item number: 7007274

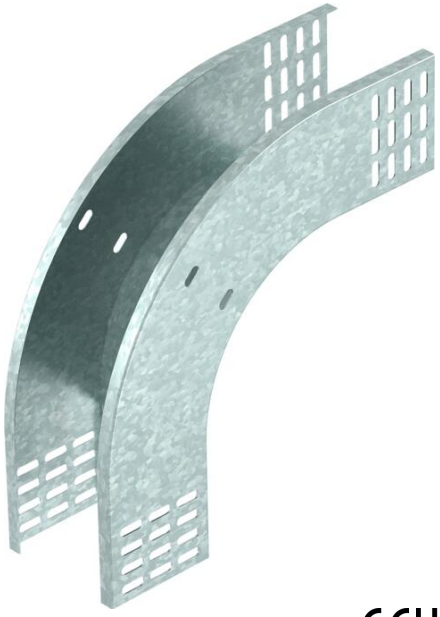

90° vertical bend, falling, for all cable tray types of 85 mm side height.
The vertical bend is pushed over the end of the cable tray and screwed tight.
Fastening materials should be ordered separately.

| | |
|---|---|
| St | Steel |
| FS | Strip galvanised |

### Master data

| | |
|---|---|
| Item number | 7007274 |
| Type | RBV 820 F FS |
| Description 1 | 90° vertical bend |
| Description 2 | falling |
| Manufacturer | OBO |
| Dimension | 85x200 |
| Colour | zinc |
| Material | Steel |
| Surface | Strip galvanised |
| Surface standard | DIN EN 10346 |
| Smallest sales unit | 1 |
| Unit of quantity | Piece |
| Weight | 104.2 kg |
| Weight unit | kg/100 pc. |
| CO2 Footprint (GWP) Cradle-to-Gate | 3,699 kg CO2e / 1 Piece |

# Technical data sheet

## 90° vertical bend, falling 85 FS

## Item number: 7007274

### Dimensions

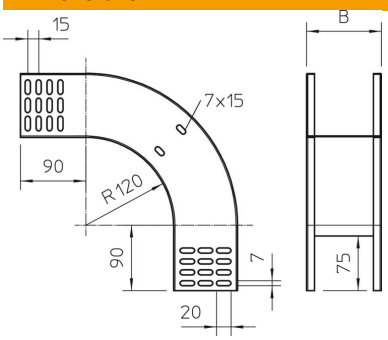


| | |
|---|---|
| Width | 200 mm |
| Width | 8 in |
| Height | 85 mm |
| Height | 3 in |
| Plate thickness | 1 mm |
| Dimension B | 200 mm |

### Technical data

| | |
|---|---|
| Bend (angle) | 90° |
| Connector version | Without connectors |
| Maintain electrical functions | no |
| Mounting perforation in base | no |
| NATO hole pattern | no |
| Change of direction | Vertical, falling |
| ROHS-conformant | yes |
| Rustproof steel, pickled | no |
| Side perforation | no |
| Wide-span version | no |
| Type of connector, cable support system | Screwed |