Technical data sheet

90° vertical bend, rising, 85 FT

Item number: 7007231

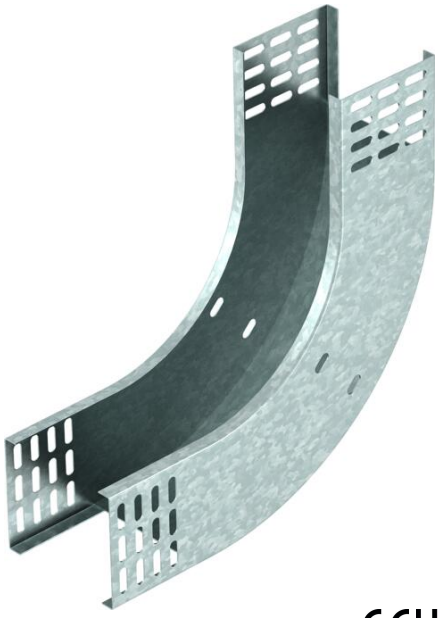

90° rising vertical bend, for all cable tray types of 85 mm side height.
The vertical bend is pushed over the end of the cable tray and screwed tight.
Fastening materials should be ordered separately.

St Steel

FT Hot-dip galvanised

Master data

Item number	7007231
Type	RBV 810 S FT
Description 1	90° vertical bend
Description 2	rising
Manufacturer	OBO
Dimension	85x100
Colour	zinc
Material	Steel
Surface	Hot-dip galvanised
Surface standard	DIN EN ISO 1461
Smallest sales unit	1
Unit of quantity	Piece
Weight	97.1 kg
Weight unit	kg/100 pc.
CO2 Footprint (GWP) Cradle-to-Gate	3,3452 kg CO2e / 1 Piece

Technical data sheet

90° vertical bend, rising, 85 FT

Item number: 7007231

Dimensions

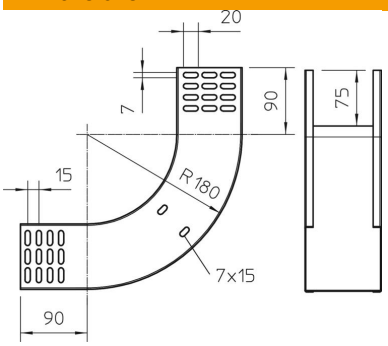

Width	100 mm
Width	4 in
Height	85 mm
Height	3 in
Plate thickness	1 mm
Dimension B	100 mm

Technical data

Bend (angle)	90°
Connector version	Without connectors
Maintain electrical functions	no
Mounting perforation in base	no
NATO hole pattern	no
Change of direction	Vertical rising
ROHS-conformant	yes
Rustproof steel, pickled	no
Side perforation	no
Wide-span version	no
Type of connector, cable support system	Screwed