# Technical data sheet

## 90° vertical bend, rising, 35 FS

## Item number: 7007186

90° rising vertical bend, for all cable tray types of 35 mm side height.
The vertical bend is pushed over the end of the cable tray and screwed tight.
Fastening materials should be ordered separately.

| | |
|---|---|
| St | Steel |
| FS | Strip galvanised |

### Master data

| | |
|---|---|
| Item number | 7007186 |
| Type | RBV 330 S FS |
| Description 1 | 90° vertical bend |
| Description 2 | rising |
| Manufacturer | OBO |
| Dimension | 35x300 |
| Colour | zinc |
| Material | Steel |
| Surface | Strip galvanised |
| Surface standard | DIN EN 10346 |
| Smallest sales unit | 1 |
| Unit of quantity | Piece |
| Weight | 99 kg |
| Weight unit | kg/100 pc. |
| CO2 Footprint (GWP) Cradle-to-Gate | 3,3684 kg CO2e / 1 Piece |

# Technical data sheet

## 90° vertical bend, rising, 35 FS

## Item number: 7007186

### Dimensions

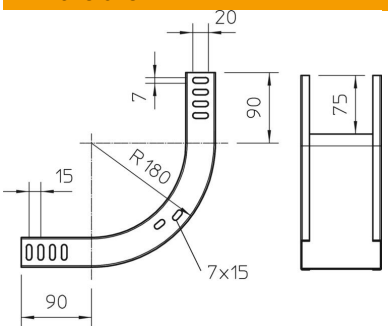


| | |
|---|---|
| Width | 300 mm |
| Width | 12 in |
| Height | 35 mm |
| Height | 1 in |
| Plate thickness | 1 mm |
| Dimension W | 300 mm |

### Technical data

| | |
|---|---|
| Bend (angle) | 90° |
| Connector version | Without connectors |
| Maintain electrical functions | no |
| Mounting perforation in base | no |
| NATO hole pattern | no |
| Change of direction | Vertical rising |
| ROHS-conformant | yes |
| Rustproof steel, pickled | no |
| Side perforation | no |
| Wide-span version | no |
| Type of connector, cable support system | Screwed |