Technical data sheet

90° vertical bend, rising 60 A2

Item number: 7007119

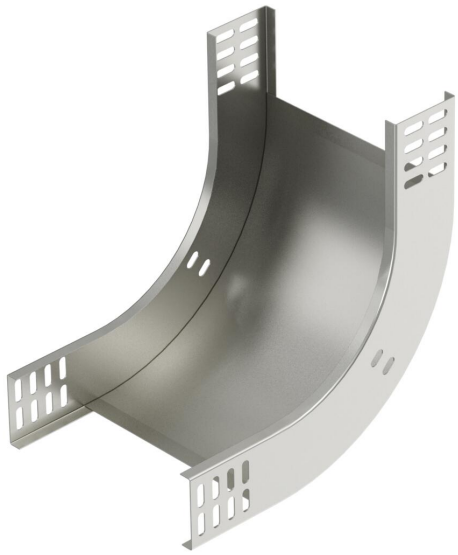

90° rising vertical bend, for all cable tray types of 60 mm side height.
The vertical bend is pushed over the end of the cable tray and screwed tight.
Fastening materials should be ordered separately.

CE

A2	Stainless steel
2B	Bright, treated

Master data

Item number	7007119
Type	RBV 650 S A2
Description 1	90° vertical bend
Description 2	rising
Manufacturer	OBO
Dimension	60x500
Colour	stainless steel
Material	Stainless steel 1.4301
Surface	Bright, treated
Surface standard	
Smallest sales unit	1
Unit of quantity	Piece
Weight	216 kg
Weight unit	kg/100 pc.
CO2 Footprint (GWP) Cradle-to-Gate	12,2845 kg CO2e / 1 Piece

Technical data sheet

90° vertical bend, rising 60 A2

Item number: 7007119

Dimensions

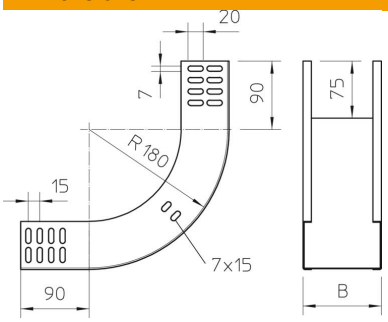

Width	500 mm
Width	20 in
Height	60 mm
Height	2 in
Plate thickness	1 mm
Dimension B	500 mm

Technical data

Bend (angle)	90°
Connector version	Without connectors
Type	Bend, rigid
Maintain electrical functions	no
With cover	no
Mounting perforation in base	no
NATO hole pattern	no
Change of direction	Vertical rising
ROHS-conformant	yes
Rustproof steel, pickled	no
Side perforation	no
Permitted temperature range, max.	120 °C
Permitted temperature range, min.	-20 °C
Wide-span version	no
Type of connector, cable support system	Screwed