Technical data sheet

90° vertical bend, falling 60 FT

Item number: 7007060

90° vertical bend, falling, for all cable tray types of 60 mm side height.
The vertical bend is pushed over the end of the cable tray and screwed tight.
Fastening materials should be ordered separately.

St Steel

FT Hot-dip galvanised

Master data

Item number	7007060
Type	RBV 615 F FT
Description 1	90° vertical bend
Description 2	falling
Manufacturer	OBO
Dimension	60x150
Colour	zinc
Material	Steel
Surface	Hot-dip galvanised
Surface standard	DIN EN ISO 1461
Smallest sales unit	1
Unit of quantity	Piece
Weight	80 kg
Weight unit	kg/100 pc.
CO2 Footprint (GWP) Cradle-to-Gate	2,3098 kg CO2e / 1 Piece

Technical data sheet

90° vertical bend, falling 60 FT

Item number: 7007060

Dimensions

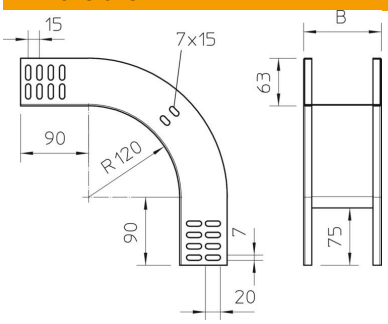

Width	150 mm
Width	6 in
Height	60 mm
Height	2 in
Plate thickness	1 mm
Dimension B	150 mm

Technical data

Bend (angle)	90°
Connector version	Without connectors
Maintain electrical functions	yes
Mounting perforation in base	no
NATO hole pattern	no
Change of direction	Vertical, falling
ROHS-conformant	yes
Rustproof steel, pickled	no
Side perforation	no
Wide-span version	no
Type of connector, cable support system	Screwed