Technical data sheet

90° vertical bend, falling 60 A4

Item number: 7006762

90° vertical bend, falling, for all cable tray types of 60 mm side height.
The vertical bend is pushed over the end of the cable tray and screwed tight.
Fastening materials should be ordered separately.

CE

A4	Stainless steel
2B	Bright, treated

Master data

Item number	7006762
Type	RBV 640 F A4
Description 1	90° vertical bend
Description 2	falling
Manufacturer	OBO
Dimension	60x400
Colour	stainless steel
Material	Stainless steel 1.4571
Surface	Bright, treated
Surface standard	
Smallest sales unit	1
Unit of quantity	Piece
Weight	130 kg
Weight unit	kg/100 pc.
CO2 Footprint (GWP) Cradle-to-Gate	8,6025 kg CO2e / 1 Piece

Technical data sheet

90° vertical bend, falling 60 A4

Item number: 7006762

Dimensions

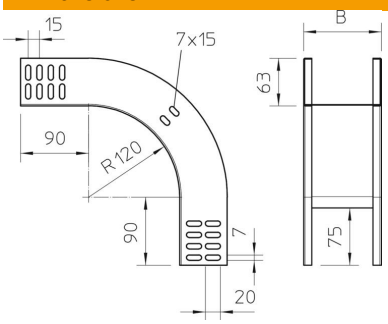

Width	400 mm
Width	16 in
Height	60 mm
Height	2 in
Plate thickness	1 mm
Dimension B	400 mm

Technical data

Bend (angle)	90°
Connector version	Without connectors
Maintain electrical functions	no
Mounting perforation in base	no
NATO hole pattern	no
Change of direction	Vertical, falling
ROHS-conformant	yes
Rustproof steel, pickled	no
Side perforation	no
Wide-span version	no
Type of connector, cable support system	Screwed