# Technical data sheet

## 90° vertical bend, rising 60 A4

## Item number: 7006724

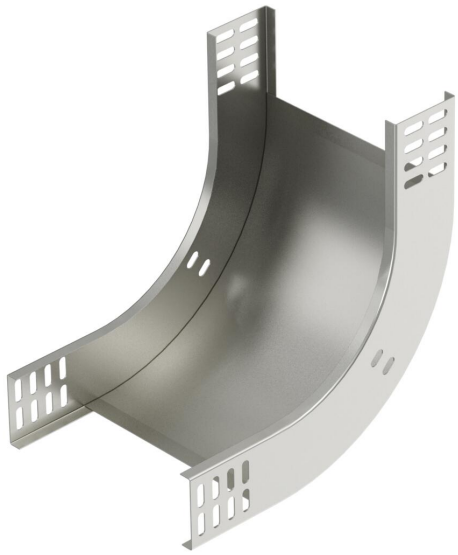

90° rising vertical bend, for all cable tray types of 60 mm side height.
The vertical bend is pushed over the end of the cable tray and screwed tight.
Fastening materials should be ordered separately.

CE

| | |
|---|---|
| A4 | Stainless steel |
| 2B | Bright, treated |

### Master data

| | |
|---|---|
| Item number | 7006724 |
| Type | RBV 620 S A4 |
| Description 1 | 90° vertical bend |
| Description 2 | rising |
| Manufacturer | OBO |
| Dimension | 60x200 |
| Colour | stainless steel |
| Material | Stainless steel 1.4571 |
| Surface | Bright, treated |
| Surface standard | |
| Smallest sales unit | 1 |
| Unit of quantity | Piece |
| Weight | 105 kg |
| Weight unit | kg/100 pc. |
| CO2 Footprint (GWP) Cradle-to-Gate | 6,7015 kg CO2e / 1 Piece |

# Technical data sheet

## 90° vertical bend, rising 60 A4

## Item number: 7006724

### Dimensions

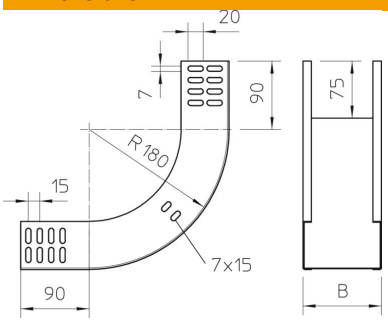


| | |
|---|---|
| Width | 200 mm |
| Width | 8 in |
| Height | 60 mm |
| Height | 2 in |
| Plate thickness | 1 mm |
| Dimension B | 200 mm |

### Technical data

| | |
|---|---|
| Bend (angle) | 90° |
| Connector version | Without connectors |
| Maintain electrical functions | no |
| Mounting perforation in base | no |
| NATO hole pattern | no |
| Change of direction | Vertical rising |
| ROHS-conformant | yes |
| Rustproof steel, pickled | no |
| Side perforation | no |
| Wide-span version | no |
| Type of connector, cable support system | Screwed |