Technical data sheet

Wall and support bracket AW 30 A4

Item number: 6443621

Medium-duty wall and support bracket with welded head plate.
Fastening of the bracket to the U support of width 400 mm or greater using a hexagonal bolt through both sides of the support. Please insert suitable spacers.

A4 Stainless steel

2B Bright, treated

Master data

Item number	6443621
Type	AW 30 31 A4
Description 1	Wall and support bracket
Description 2	with welded head plate
Manufacturer	OBO
Dimension	B310mm
Colour	stainless steel
Material	Stainless steel 1.4571
Surface	Bright, treated
Surface standard	
Smallest sales unit	1
Unit of quantity	Piece
Weight	60.5 kg
Weight unit	kg/100 pc.
CO2 Footprint (GWP) Cradle-to-Gate	3,5321 kg CO2e / 1 Piece

Technical data sheet

Wall and support bracket AW 30 A4

Item number: 6443621

Dimensions

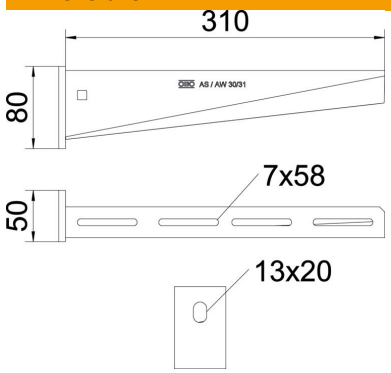

Length	50 mm
Width	310 mm
Height	80 mm
Dimension A	50 mm
Dimension B	310 mm
Dimension H	80 mm

Technical data

Version for	Wall and support bracket
F in kN	3 kN
Maintain electrical functions	no
Hole diameter	13 mm
ROHS-conformant	yes
Rustproof steel, pickled	no
Angle range, max.	90 mm
Angle range, min.	90 mm

Loads

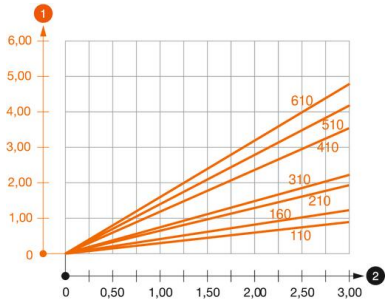

Load diagram, bracket, type AW 30

1. Bending of the bracket tip at permitted bracket load
2. Permitted bracket load in kN without man load

— Load curve with bracket lengths in mm

Characteristic anchor load values for wall and support bracket AW 30

Wall fastening									
	Max. load [kN]								
	Bracket width [mm]								
Anchor type	110	160	210	310	410	510	560	610	710
BZ3 10x90/0-30	3.00	2.10	-	-	-	-	-	-	-
BZ3 12x110/0-35	-	-	3.00	2.71	2.07	2.02	1.98	1.98	1.51

Max. Belastung F ges. = Kabelgewicht + Kabelrinne + Ausleger. Die angegebenen Werte basieren auf gerissenem Beton der Festigkeitsklasse C20/25. Die Einbaubedingungen der ETA-Zulassung (Dübel) sind zu beachten!