Technical data sheet

Wall and support bracket MWAG 12

Item number: 6424608

Light-duty wall and support bracket with edged design for screwless mesh cable tray fastening.
Including truss-head bolt M10 x 25 for fastening to U supports.
Including truss-head bolt M10 x 25 for fastening to U supports.

AW US3 US5 US7

St	Steel
FS	Strip galvanised

Master data

Item number	6424608
Type	MWAG 12 21 FS
Description 1	Wall and support bracket
Description 2	for mesh cable tray
Manufacturer	OBO
Dimension	B210mm
Colour	zinc
Material	Steel
Surface	Strip galvanised
Surface standard	DIN EN 10346
Smallest sales unit	1
Unit of quantity	Piece
Weight	24.4 kg
Weight unit	kg/100 pc.
CO2 Footprint (GWP) Cradle-to-Gate	0,7514 kg CO2e / 1 Piece

Technical data sheet

Wall and support bracket MWAG 12

Item number: 6424608

Dimensions

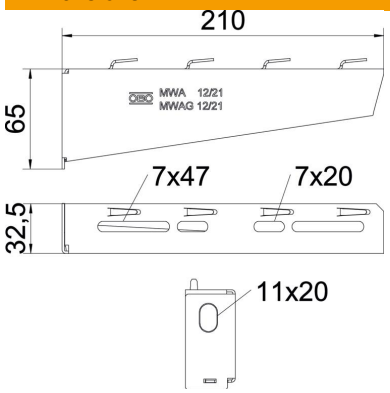

Length	32.5 mm
Width	210 mm
Height	65 mm
Dimension A	32.5 mm
Dimension B	210 mm
Dimension H	65 mm

Technical data

Version for	Wall and support bracket
F in kN	1.2 kN
Maintain electrical functions	no
for width max.	200 mm
for width min.	200
Hole diameter	11 mm
ROHS-conformant	yes
Rustproof steel, pickled	no
Angle range, max.	90 mm
Angle range, min.	90 mm

Loads

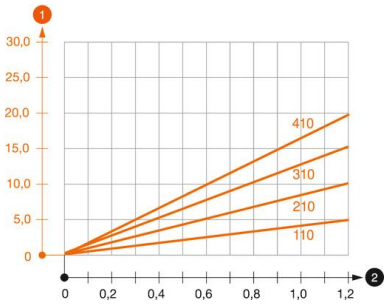

Load diagram, bracket type MWAG 12

1 Bending of the bracket tip at permitted bracket load

2 Permitted bracket load in kN without man load

— Load curve with bracket lengths in mm

Characteristic anchor load values for wall and support bracket MWAG 12

Wall fastening				
	Max. load [kN]			
	Bracket width [mm]			
Anchor type	110	210	310	410
BZ3 10x90/0-30	1.2	1.2	1.2	1.2

Max. Belastung F ges. = Kabelgewicht + Kabelrinne + Ausleger. Die angegebenen Werte basieren auf gerissenem Beton der Festigkeitsklasse C20/25. Die Einbaubedingungen der ETA-Zulassung (Dübel) sind zu beachten!

Technical data sheet

Wall and support bracket MWAG 12

Item number: 6424608

Load values for MWAG 12 on suspended support

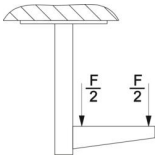

	Max. total load F in kN			
	Bracket length in mm			
Support	100	200	300	400
US 3 K/ 20 - 60	1.2	1.2	1.2	1.2
US 3 K/ 70 - 120	1.2	1.2	1.2	1.2
US 5 K/ 20 - 60	1.2	1.2	1.2	1.2
US 5 K/ 70 - 120	1.2	1.2	1.2	1.2