Technical data sheet

Wall and support bracket MWA 12 A4

Item number: 6424444

Light-duty wall and support bracket.
Including truss-head bolt M10 x 25 for fastening to U supports.
Including truss-head screw M10 x 25 for fastening to U supports.

A4 Stainless steel

2B Bright, treated

Master data

Item number	6424444
Type	MWA 12 31S A4
Description 1	Wall and support bracket
Description 2	with fastening bolt M10x20
Manufacturer	OBO
Dimension	B310mm
Colour	stainless steel
Material	Stainless steel 1.4571
Surface	Bright, treated
Surface standard	
Smallest sales unit	1
Unit of quantity	Piece
Weight	51.8 kg
Weight unit	kg/100 pc.
CO2 Footprint (GWP) Cradle-to-Gate	3,3169 kg CO2e / 1 Piece

Technical data sheet

Wall and support bracket MWA 12 A4

Item number: 6424444

Dimensions

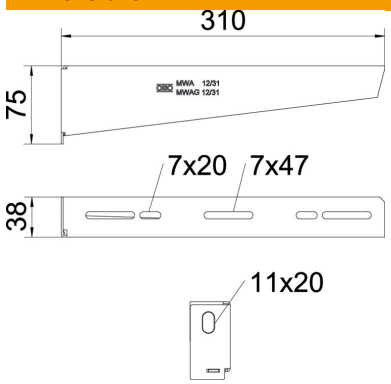

Length	38 mm
Width	310 mm
Width	12 in
Height	75 mm
Height	2.95 in
Dimension A	38 mm
Dimension B	310 mm
Dimension H	75 mm
Dimension L	310 mm

Technical data

Version for	Wall and support bracket
F in kN	1.2 kN
Maintain electrical functions	yes
Hole diameter	11 mm
ROHS-conformant	yes
Rustproof steel, pickled	no
Angle range, max.	90 mm
Angle range, min.	90 mm

Characteristic anchor load values for wall and support bracket MWA 12

Wall fastening				
	Max. load [kN]			
	Bracket width [mm]			
Anchor type	110	210	310	410
BZ3 10x90/0-30	1.2	1.2	1.2	1.2

Max. Belastung F ges. = Kabelgewicht + Kabelrinne + Ausleger. Die angegebenen Werte basieren auf gerissenem Beton der Festigkeitsklasse C20/25. Die Einbaubedingungen der ETA-Zulassung (Dübel) sind zu beachten!

Load values for MWA 12 on suspended support

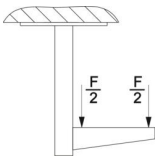

	Max. total load F in kN			
	Bracket length in mm			
Support	100	200	300	400
US 3 K/ 20 - 60	1.2	1.2	1.2	1.2
US 3 K/ 70 - 120	1.2	1.2	1.2	1.2
US 5 K/ 20 - 60	1.2	1.2	1.2	1.2
US 5 K/ 70 - 120	1.2	1.2	1.2	1.2