Technical data sheet

Wall and support bracket MWA 12 A2

Item number: 6424432

Light-duty wall and support bracket.
Including truss-head bolt M10 x 25 for fastening to U supports.
Including truss-head screw M10 x 25 for fastening to U supports.

A2	Stainless steel
2B	Bright, treated

Master data

Item number	6424432
Type	MWA 12 21S A2
Description 1	Wall and support bracket
Description 2	with fastening bolt M10x20
Manufacturer	OBO
Dimension	B210mm
Colour	stainless steel
Material	Stainless steel 1.4301
Surface	Bright, treated
Surface standard	
Smallest sales unit	1
Unit of quantity	Piece
Weight	26.9 kg
Weight unit	kg/100 pc.
CO2 Footprint (GWP) Cradle-to-Gate	1,7774 kg CO2e / 1 Piece

Technical data sheet

Wall and support bracket MWA 12 A2

Item number: 6424432

Dimensions

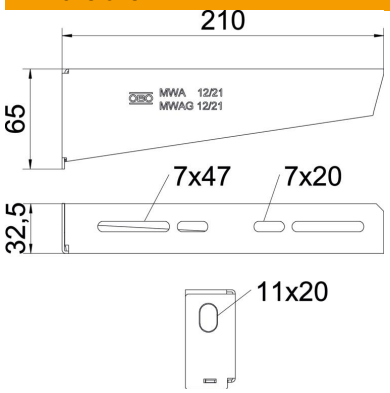

Length	32.5 mm
Width	210 mm
Width	8 in
Height	65 mm
Height	2.56 in
Dimension A	32.5 mm
Dimension B	210 mm
Dimension H	65 mm
Dimension L	210 mm

Technical data

Version for	Wall and support bracket
F in kN	1.2 kN
Maintain electrical functions	yes
Hole diameter	11 mm
ROHS-conformant	yes
Rustproof steel, pickled	no
Angle range, max.	90 mm
Angle range, min.	90 mm

Characteristic anchor load values for wall and support bracket MWA 12

Wall fastening				
	Max. load [kN]			
	Bracket width [mm]			
Anchor type	110	210	310	410
BZ3 10x90/0-30	1.2	1.2	1.2	1.2

Max. Belastung F ges. = Kabelgewicht + Kabelrinne + Ausleger. Die angegebenen Werte basieren auf gerissenem Beton der Festigkeitsklasse C20/25. Die Einbaubedingungen der ETA-Zulassung (Dübel) sind zu beachten!

Load values for MWA 12 on suspended support

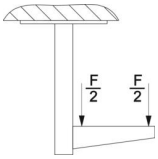

	Max. total load F in kN			
	Bracket length in mm			
Support	100	200	300	400
US 3 K/ 20 - 60	1.2	1.2	1.2	1.2
US 3 K/ 70 - 120	1.2	1.2	1.2	1.2
US 5 K/ 20 - 60	1.2	1.2	1.2	1.2
US 5 K/ 70 - 120	1.2	1.2	1.2	1.2