Technical data sheet

Wall and support bracket MWAG 12 A2

Item number: 6424406

Light-duty wall and support bracket with edged design for screwless mesh cable tray fastening.
Including truss-head bolt M10 x 25 for fastening to U supports.
Including truss-head bolt M10 x 25 for fastening to U supports.

AW US3 US5 US7

A2	Stainless steel
2B	Bright, treated

Master data

Item number	6424406
Type	MWAG 12 41 A2
Description 1	Wall and support bracket
Description 2	for mesh cable tray
Manufacturer	OBO
Dimension	B410mm
Colour	stainless steel
Material	Stainless steel 1.4301
Surface	Bright, treated
Surface standard	
Smallest sales unit	1
Unit of quantity	Piece
Weight	69.2 kg
Weight unit	kg/100 pc.
CO2 Footprint (GWP) Cradle-to-Gate	4,4158 kg CO2e / 1 Piece

Technical data sheet

Wall and support bracket MWAG 12 A2

Item number: 6424406

Dimensions

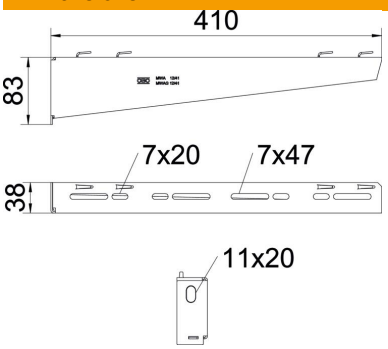

Width	410 mm
Height	83 mm
Dimension A	38 mm
Dimension B	410 mm
Dimension H	83 mm

Technical data

Version for	Wall and support bracket
F in kN	1.2 kN
Maintain electrical functions	no
for width min.	400
Hole diameter	11 mm
ROHS-conformant	yes
Rustproof steel, pickled	no
Angle range, max.	90 mm
Angle range, min.	90 mm

Characteristic anchor load values for wall and support bracket MWAG 12

Wall fastening				
	Max. load [kN]			
	Bracket width [mm]			
Anchor type	110	210	310	410
BZ3 10x90/0-30	1.2	1.2	1.2	1.2

Max. Max. total load F = cable weight + cable tray + bracket. The stated values are based on cracked concrete of the resistance class C20/25. Please comply with the installation requirements of the ETA approval (anchors).

Load values for MWAG 12 on suspended support

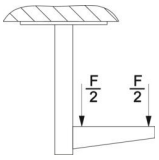

	Max. total load F in kN			
	Bracket length in mm			
Support	100	200	300	400
US 3 K/ 20 - 60	1.2	1.2	1.2	1.2
US 3 K/ 70 - 120	1.2	1.2	1.2	1.2
US 5 K/ 20 - 60	1.2	1.2	1.2	1.2
US 5 K/ 70 - 120	1.2	1.2	1.2	1.2