Technical data sheet

Wall and support bracket AW 15 FT

Item number: 6420826

Light-duty wall and support bracket with welded head plate.
Fastening of the bracket to the U support of width 400 mm or greater using a hexagonal bolt through both sides of the support. Please insert suitable spacers.

St Steel

FT Hot-dip galvanised

Master data

Item number	6420826
Type	AW 15 61 FT
Description 1	Wall and support bracket
Description 2	with welded head plate
Manufacturer	OBO
Dimension	B610mm
Colour	zinc
Material	Steel
Surface	Hot-dip galvanised
Surface standard	DIN EN ISO 1461
Smallest sales unit	1
Unit of quantity	Piece
Weight	85 kg
Weight unit	kg/100 pc.
CO2 Footprint (GWP) Cradle-to-Gate	1,9713 kg CO2e / 1 Piece

Technical data sheet

Wall and support bracket AW 15 FT

Item number: 6420826

Dimensions

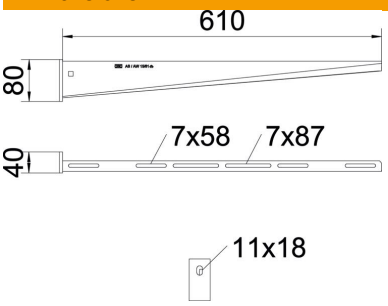

Length	40 mm
Width	610 mm
Width	24 in
Height	80 mm
Height	3.15 in
Dimension A	40 mm
Dimension B	610 mm
Dimension H	80 mm
Dimension W	610 mm

Technical data

Version for	Wall and support bracket
EPD article	yes
F in kN	1.5 kN
Maintain electrical functions	no
Hole diameter	11 mm
ROHS-conformant	yes
Rustproof steel, pickled	no
Angle range, max.	90 mm
Angle range, min.	90 mm

Loads

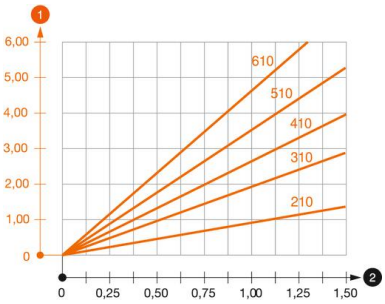

Load diagram, bracket, type AW 15

1. Bending of the bracket tip at permitted bracket load
2. Permitted bracket load in kN without man load

—— Load curve with bracket lengths in mm

Characteristic anchor load values for wall bracket AW 15

Wall fastening								
	Max. load [kN]							
	Bracket width [mm]							
Anchor type	110	160	210	310	410	510	560	610
BZ3 10x90/0-30	1.5	1.5	1.5	1.47	1.25	1.13	0.95	0.94

Die angegebenen Werte basieren auf gerissenem Beton der Festigkeitsklasse C20/25. Die Einbaubedingungen der ETA-Zulassung (Dübel) sind zu beachten!

Technical data sheet

Wall and support bracket AW 15 FT

Item number: 6420826

Load values for AW 15 on suspended support

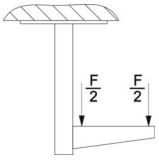

	Max. total load F in kN			
	Bracket length in mm			
Support	100	200	300	400
US 3 K/ 20 - 60	1.5	1.5	1.3	1.3
US 3 K/ 70 - 120	1.5	1.5	1.3	1.3
US 5 K/ 20 - 60	1.5	1.5	1.5	1.5
US 5 K/ 70 - 120	1.5	1.5	1.4	1.5