Technical data sheet

Wall and support bracket AW 15 FT

Item number: 6420788

Light-duty wall and support bracket with welded head plate.
Fastening of the bracket to the U support of width 400 mm or greater using a hexagonal bolt through both sides of the support. Please insert suitable spacers.

St Steel

FT Hot-dip galvanised

Master data

Item number	6420788
Type	AW 15 51 FT
Description 1	Wall and support bracket
Description 2	with welded head plate
Manufacturer	OBO
Dimension	B510mm
Colour	zinc
Material	Steel
Surface	Hot-dip galvanised
Surface standard	DIN EN ISO 1461
Smallest sales unit	1
Unit of quantity	Piece
Weight	70.25 kg
Weight unit	kg/100 pc.
CO2 Footprint (GWP) Cradle-to-Gate	1,7144 kg CO2e / 1 Piece

Technical data sheet

Wall and support bracket AW 15 FT

Item number: 6420788

Dimensions

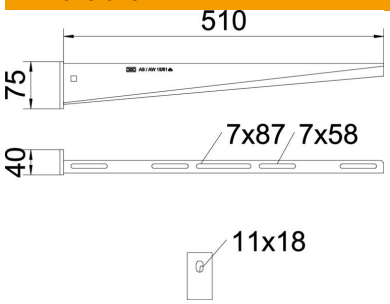

Length	40 mm
Width	510 mm
Width	20 in
Height	75 mm
Height	2.95 in
Dimension A	40 mm
Dimension B	510 mm
Dimension H	75 mm
Dimension W	510 mm

Technical data

Version for	Wall and support bracket
EPD article	yes
F in kN	1.5 kN
Maintain electrical functions	no
Hole diameter	11 mm
ROHS-conformant	yes
Rustproof steel, pickled	no
Angle range, max.	90 mm
Angle range, min.	90 mm

Loads

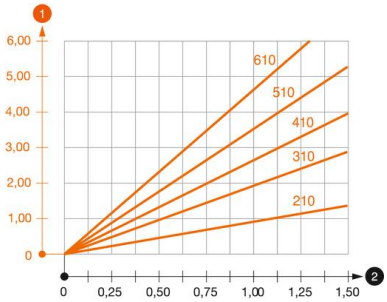

Load diagram, bracket, type AW 15

1 Bending of the bracket tip at permitted bracket load

2 Permitted bracket load in kN without man load

—— Load curve with bracket lengths in mm

Characteristic anchor load values for wall bracket AW 15

Wall fastening								
	Max. load [kN]							
	Bracket width [mm]							
Anchor type	110	160	210	310	410	510	560	610
BZ3 10x90/0-30	1.5	1.5	1.5	1.47	1.25	1.13	0.95	0.94

Die angegebenen Werte basieren auf gerissenem Beton der Festigkeitsklasse C20/25. Die Einbaubedingungen der ETA-Zulassung (Dübel) sind zu beachten!

Technical data sheet

Wall and support bracket AW 15 FT

Item number: 6420788

Load values for AW 15 on suspended support

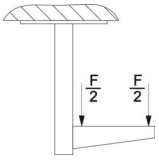

	Max. total load F in kN			
	Bracket length in mm			
Support	100	200	300	400
US 3 K/ 20 - 60	1.5	1.5	1.3	1.3
US 3 K/ 70 - 120	1.5	1.5	1.3	1.3
US 5 K/ 20 - 60	1.5	1.5	1.5	1.5
US 5 K/ 70 - 120	1.5	1.5	1.4	1.5