Technical data sheet

Wall and support bracket AW 15 FT

Item number: 6420745

Light-duty wall and support bracket with welded head plate.
Fastening of the bracket to the U support of width 400 mm or greater using a hexagonal bolt through both sides of the support. Please insert suitable spacers.

St Steel

FT Hot-dip galvanised

Master data

Item number	6420745
Type	AW 15 41 FT
Description 1	Wall and support bracket
Description 2	with welded head plate
Manufacturer	OBO
Dimension	B410mm
Colour	zinc
Material	Steel
Surface	Hot-dip galvanised
Surface standard	DIN EN ISO 1461
Smallest sales unit	1
Unit of quantity	Piece
Weight	54.8 kg
Weight unit	kg/100 pc.
CO2 Footprint (GWP) Cradle-to-Gate	1,2233 kg CO2e / 1 Piece

Technical data sheet

Wall and support bracket AW 15 FT

Item number: 6420745

Dimensions

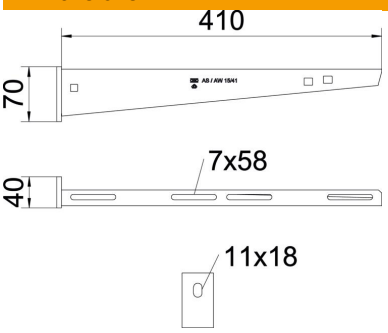

Length	40 mm
Width	410 mm
Width	16 in
Height	70 mm
Height	2.75 in
Dimension A	40 mm
Dimension B	410 mm
Dimension H	70 mm
Dimension W	410 mm

Technical data

Version for	Wall and support bracket
EPD article	yes
F in kN	1.5 kN
Maintain electrical functions	yes
Hole diameter	11 mm
ROHS-conformant	yes
Rustproof steel, pickled	no
Angle range, max.	90 mm
Angle range, min.	90 mm

Loads

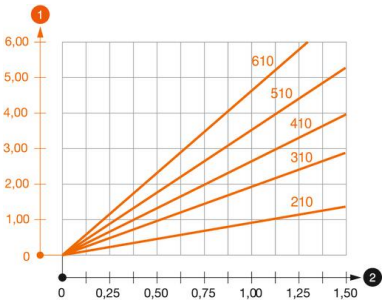

Load diagram, bracket, type AW 15

1. Bending of the bracket tip at permitted bracket load
2. Permitted bracket load in kN without man load

— Load curve with bracket lengths in mm

Characteristic anchor load values for wall bracket AW 15

Wall fastening								
	Max. load [kN]							
	Bracket width [mm]							
Anchor type	110	160	210	310	410	510	560	610
BZ3 10x90/0-30	1.5	1.5	1.5	1.47	1.25	1.13	0.95	0.94

Die angegebenen Werte basieren auf gerissenem Beton der Festigkeitsklasse C20/25. Die Einbaubedingungen der ETA-Zulassung (Dübel) sind zu beachten!

Technical data sheet

Wall and support bracket AW 15 FT

Item number: 6420745

Load values for AW 15 on suspended support

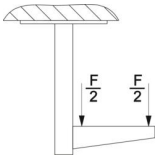

	Max. total load F in kN			
	Bracket length in mm			
Support	100	200	300	400
US 3 K/ 20 - 60	1.5	1.5	1.3	1.3
US 3 K/ 70 - 120	1.5	1.5	1.3	1.3
US 5 K/ 20 - 60	1.5	1.5	1.5	1.5
US 5 K/ 70 - 120	1.5	1.5	1.4	1.5