Technical data sheet

Wall and support bracket AW 30 FT

Item number: 6419844

Medium-duty wall and support bracket with welded head plate.
Fastening of the bracket to the U support of width 400 mm or greater using a hexagonal bolt through both sides of the support. Please insert suitable spacers.

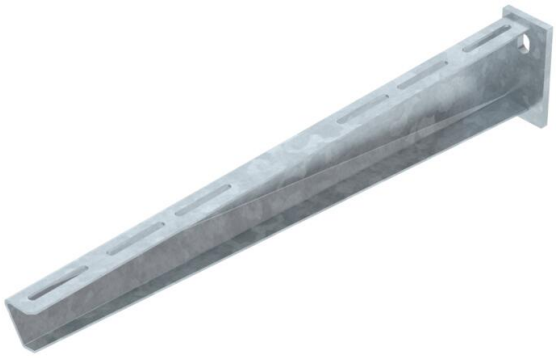

St Steel

FT Hot-dip galvanised

Master data

Item number	6419844
Type	AW 30 56 FT
Description 1	Wall and support bracket
Description 2	with welded head plate
Manufacturer	OBO
Dimension	B560mm
Colour	zinc
Material	Steel
Surface	Hot-dip galvanised
Surface standard	DIN EN ISO 1461
Smallest sales unit	1
Unit of quantity	Piece
Weight	148.8 kg
Weight unit	kg/100 pc.
CO2 Footprint (GWP) Cradle-to-Gate	3,8849 kg CO2e / 1 Piece

Technical data sheet

Wall and support bracket AW 30 FT

Item number: 6419844

Dimensions

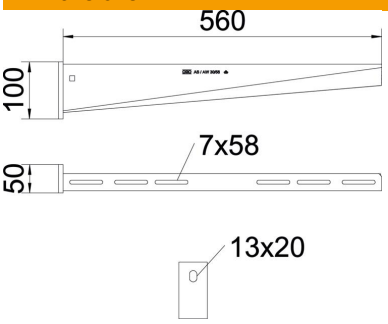

Length	50 mm
Width	560 mm
Height	100 mm
Dimension A	50 mm
Dimension B	560 mm
Dimension H	100 mm

Technical data

Version for	Wall and support bracket
EPD article	yes
F in kN	3 kN
Maintain electrical functions	no
Hole diameter	13 mm
ROHS-conformant	yes
Rustproof steel, pickled	no
Angle range, max.	90 mm
Angle range, min.	90 mm

Loads

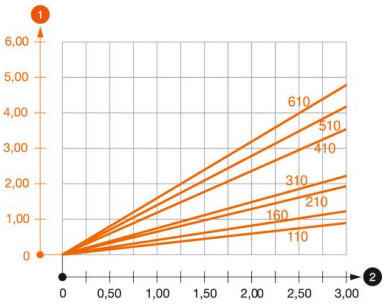

Load diagram, bracket, type AW 30

1. Bending of the bracket tip at permitted bracket load
2. Permitted bracket load in kN without man load

— Load curve with bracket lengths in mm

Characteristic anchor load values for wall and support bracket AW 30

Wall fastening									
	Max. load [kN]								
	Bracket width [mm]								
Anchor type	110	160	210	310	410	510	560	610	710
BZ3 10x90/0-30	3.00	2.10	-	-	-	-	-	-	-
BZ3 12x110/0-35	-	-	3.00	2.71	2.07	2.02	1.98	1.98	1.51

Die angegebenen Werte basieren auf gerissenem Beton der Festigkeitsklasse C20/25. Die Einbaubedingungen der ETA-Zulassung (Dübel) sind zu beachten!

Technical data sheet

Wall and support bracket AW 30 FT

Item number: 6419844

Load values for AW 30 on suspended support

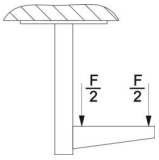

	Max. total load F in kN			
	Bracket length in mm			
Support	100	200	300	400
US 3 K/ 20 - 60	2.1	1.8	1.3	1.3
US 3 K/ 70 - 120	1.8	1.5	1.3	1.3
US 5 K/ 20 - 60	2.4	2.0	1.8	2.5
US 5 K/ 70 - 120	2.4	2.0	1.4	2.5