Technical data sheet

Wall and support bracket AW 55 FT

Item number: 6418651

Heavy-duty wall and support bracket with welded head plate.
Fastening of the bracket to the U support of width 400 mm or greater using a hexagonal bolt through both sides of the support. Please insert suitable spacers.

CE UKCA

St Steel

FT Hot-dip galvanised

Master data

Item number	6418651
Type	AW 55 71 FT
Description 1	Wall and support bracket
Description 2	with welded head plate
Manufacturer	OBO
Dimension	B710mm
Colour	zinc
Material	Steel
Surface	Hot-dip galvanised
Surface standard	DIN EN ISO 1461
Smallest sales unit	1
Unit of quantity	Piece
Weight	418 kg
Weight unit	kg/100 pc.
CO2 Footprint (GWP) Cradle-to-Gate	10,3033 kg CO2e / 1 Piece

Technical data sheet

Wall and support bracket AW 55 FT

Item number: 6418651

Dimensions

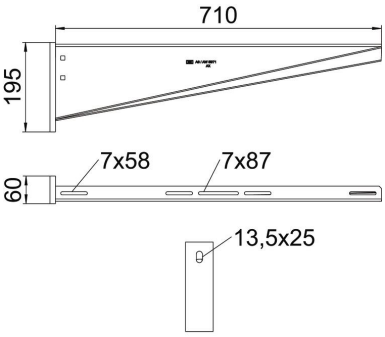

Length	60 mm
Width	710 mm
Height	195 mm
Dimension A	60 mm
Dimension B	710 mm
Dimension H	195 mm

Technical data

Version for	Wall and support bracket
F in kN	5.5 kN
Maintain electrical functions	no
Hole diameter	13.5 mm
ROHS-conformant	yes
Rustproof steel, pickled	no
Angle range, max.	90 mm
Angle range, min.	90 mm

Loads

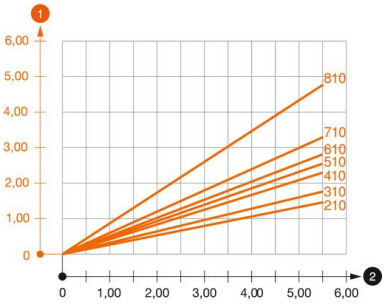

Load diagram, bracket, type AW 55

1. Bending of the bracket tip at permitted bracket load
2. Permitted bracket load in kN without man load

— Load curve with bracket lengths in mm

Characteristic anchor load values for wall and support bracket AW 55

Wall fastening										
	Max. load [kN]									
	Bracket width [mm]									
Anchor type	210	310	410	510	560	610	710	810	910	1010
BZ3 12x110/0-35	3.92	3.83	3.79	3.46	3.30	3.30	3.15	2.53	2.38	2.23

Die angegebenen Werte basieren auf gerissenem Beton der Festigkeitsklasse C20/25. Die Einbaubedingungen der ETA-Zulassung (Dübel) sind zu beachten!