Technical data sheet

Wall and clamping bracket AWSS FT

Item number: 6417922

Wall bracket, heavy duty.
The heavy-duty wall bracket can be used in conjunction with wide span systems or for large support distances of cable tray or cable ladder systems.

St Steel

FT Hot-dip galvanised

Master data

Item number	6417922
Type	AWSS 61 FT
Description 1	Wall bracket
Description 2	heavyweight type
Manufacturer	OBO
Dimension	B610mm
Colour	zinc
Material	Steel
Surface	Hot-dip galvanised
Surface standard	DIN EN ISO 1461
Smallest sales unit	1
Unit of quantity	Piece
Weight	742.3 kg
Weight unit	kg/100 pc.
CO2 Footprint (GWP) Cradle-to-Gate	18,4747 kg CO2e / 1 Piece

Technical data sheet

Wall and clamping bracket AWSS FT

Item number: 6417922

Dimensions

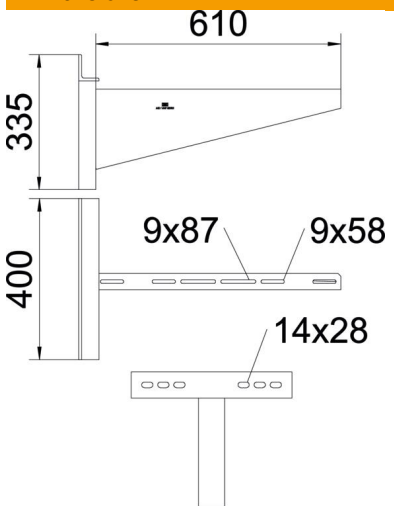

Length	400 mm
Width	610 mm
Height	335 mm
Dimension A	400 mm
Dimension B	610 mm
Dimension b	160 mm
Dimension b1	240 mm
Dimension b2	320 mm
Dimension H	335 mm

Technical data

Version for	Wall brackets
F in kN	10 kN
Maintain electrical functions	no
Hole diameter	14 mm
ROHS-conformant	yes
Rustproof steel, pickled	no

Characteristic anchor load values for wall and clamping bracket AWSS

Wall fastening									
	Max. load [kN]								
	Bracket width [mm]								
Anchor type	210	310	410	510	610	710	810	910	1,010
BZ 12-15-35/110	10	10	10	10	10	8	7	6.5	5.5

Max. total load F = cable weight + cable tray + bracket. The load capacity values increase considerably when used in uncracked concrete. Observe the load capacity of the brackets (diagram) and the installation conditions of the DIBt approval (anchors).The testing of the widths 710–1010 mm took place at the maximum route width (600 mm) with the load at the end of the bracket.