Technical data sheet

Omega profile for cable cover A4

Item number: 6399151



Stainless steel omega profile V4A.
Closed omega profile for the protection of cables.
The flanges are perforated for the fastening of the profiles.

CE UKCA

A4 Stainless steel

BK Bright

Master data

Item number	6399151
Type	Omega 40x70 A4
Description 1	Omega profile
Description 2	for cable cover
Manufacturer	OBO
Dimension	70x116x3000mm
Colour	stainless steel
Material	Stainless steel 1.4571
Surface	Bright
Surface standard	
Smallest sales unit	3
Unit of quantity	Metre
Weight	526 kg
Weight unit	kg/100 m

Technical data sheet

Omega profile for cable cover A4

Item number: 6399151

Dimensions

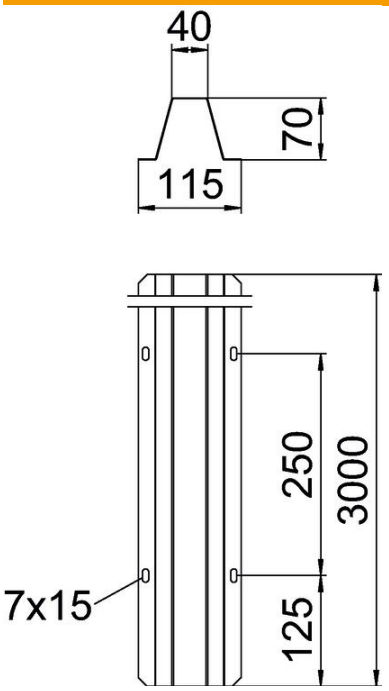

Length	3,000 mm
Width	115.5 mm
Height	70 mm
Plate thickness	1 mm

Technical data

ROHS-conformant	yes