Technical data sheet

Omega profile for cable cover A4

Item number: 6399150



Stainless steel omega profile V4A.
Closed omega profile for the protection of cables.
The flanges are perforated for the fastening of the profiles.

CE UKCA

A4 Stainless steel

BK Bright

Master data

Item number	6399150
Type	Omega 35x35 A4
Description 1	Omega profile
Description 2	for cable cover
Manufacturer	OBO
Dimension	35x92x3000mm
Colour	stainless steel
Material	Stainless steel 1.4571
Surface	Bright
Surface standard	
Smallest sales unit	3
Unit of quantity	Metre
Weight	340.2 kg
Weight unit	kg/100 m

Technical data sheet

Omega profile for cable cover A4

Item number: 6399150

Dimensions

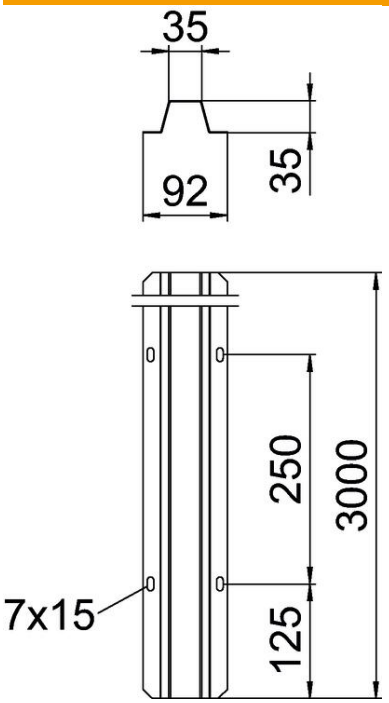

Length	3,000 mm
Width	91.7 mm
Height	35 mm
Plate thickness	1 mm

Technical data

ROHS-conformant	yes