Technical data sheet

TP wall and ceiling bracket A2

Item number: 6365989

TP wall and ceiling bracket with clamping lugs for screwless mesh cable tray fastening.
If the wall and ceiling bracket is fastened directly to the wall or ceiling, then, for reasons of stability, always use the spacer, type DS 4.

Max. side height of the cable support system 60 mm.

A2	Stainless steel
2B	Bright, treated

Master data

Item number	6365989
Type	TPDG 145 A2
Description 1	Wall and ceiling bracket
Description 2	for mesh cable tray
Manufacturer	OBO
Dimension	B145mm
Colour	stainless steel
Material	Stainless steel 1.4301
Surface	Bright, treated
Surface standard	
Smallest sales unit	6
Unit of quantity	Piece
Weight	52 kg
Weight unit	kg/100 pc.
CO2 Footprint (GWP) Cradle-to-Gate	2,5396 kg CO2e / 1 Piece

Technical data sheet

TP wall and ceiling bracket A2

Item number: 6365989

Dimensions

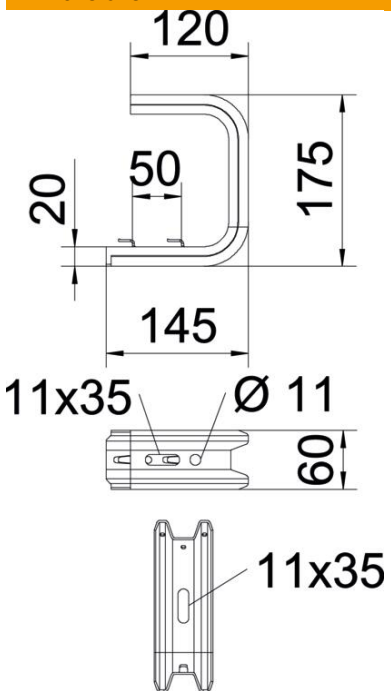

Length	175 mm
Width	145 mm
Height	60 mm
Dimension B	145 mm
Dimension H	175 mm
Dimension L	50 mm

Technical data

Version for	Suspension bracket (C clamp)
F in kN ceiling	1.3 kN
F in kN wall	1.4 kN
Maintain electrical functions	no
for width max.	100 mm
for width min.	100
Suitable for mesh cable tray	yes
Suitable for cable ladder	no
Suitable for cable tray	no
Suitable for tray/ladder width	100 mm
ROHS-conformant	yes

Loads

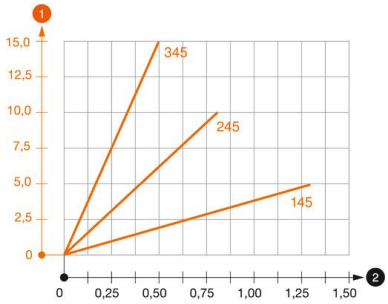

Load diagram, ceiling clamp TPDG

1. Bending of the bracket tip at permitted bracket load
2. Permitted bracket load in kN without man load

— Load curve with bracket lengths in mm

Characteristic anchor load values for TPDG wall and ceiling bracket

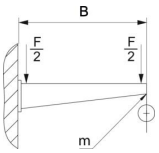

Wall fastening					
	Max. load [kN]				
	Bracket length [mm]				
Anchor type	145	245	345	445	545
BZ3 8x95/0-40	0.56	0.53	0.50	0.47	0.44
BZ3 10x90/0-30	1.03	0.96	0.68	0.54	

Max. total load F = cable weight + cable tray + ceiling clamp. The load capacity values increase considerably when used in uncracked concrete. The values given are based on concrete of strength class C20/25.