# Technical data sheet

## TP support/wall and support bracket A2

## Item number: 6364881

TP support / bracket for the fastening to horizontal concrete ceilings and walls.
If the profile is fastened directly to the ceiling or the profile is screwed together as head reinforcement, then, for reasons of stability, always use the spacer, type DS 4.

| | |
|---|---|
| A2 | Stainless steel |
| 2B | Bright, treated |

### Master data

| | |
|---|---|
| Item number | 6364881 |
| Type | TPSA 345 A2 |
| Description 1 | TP wall and support bracket |
| Description 2 | use as support and bracket |
| Manufacturer | OBO |
| Dimension | B345mm |
| Colour | stainless steel |
| Material | Stainless steel 1.4301 |
| Surface | Bright, treated |
| Surface standard | |
| Smallest sales unit | 1 |
| Unit of quantity | Piece |
| Weight | 59 kg |
| Weight unit | kg/100 pc. |
| CO2 Footprint (GWP) Cradle-to-Gate | 2,9461 kg CO2e / 1 Piece |

# Technical data sheet

## TP support/wall and support bracket A2

## Item number: 6364881

### Dimensions

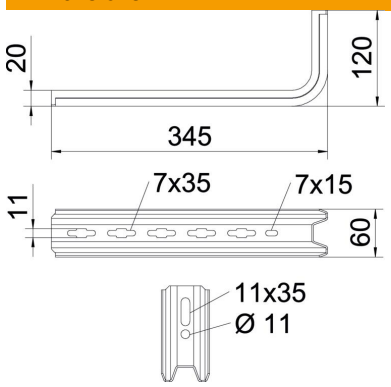


| | |
|---|---|
| Length | 345 mm |
| Width | 60 mm |
| Height | 120 mm |
| Dimension B | 60 mm |
| Dimension H | 120 mm |
| Dimension L | 345 mm |

### Technical data

| | |
|---|---|
| Version for | Wall and support bracket |
| F in kN | 0.55 kN |
| Maintain electrical functions | no |
| for width max. | 300 mm |
| for width min. | 300 |
| ROHS-conformant | yes |
| Rustproof steel, pickled | no |

### Loads

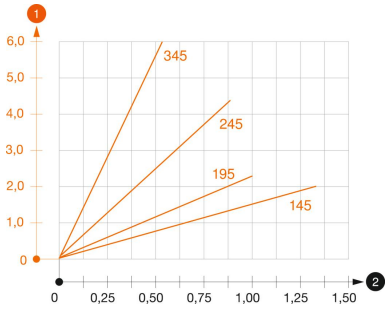


**Load diagram, bracket, type TPSA**

1 Bending of the bracket tip at permitted bracket load

2 Permitted bracket load in kN without man load

— Load curve with bracket lengths in mm

### Characteristic anchor load values for TP bracket

| Wall fastening | | | | |
|---|---|---|---|---|
| | Max. load [kN] | | | |
| | Bracket width [mm] | | | |
| Anchor type | 145 | 195 | 245 | 345 |
| BZ-U 8-30/95 | 1 | 1.3 | 0.7 | 2.4 |
| BZ-U 10-30/110 | 1.5 | 1 | 0.9 | 0.55 |

Max. total load F = cable weight + cable tray + bracket. The load capacity values increase considerably when used in uncracked concrete. The values given are based on concrete of strength class C20/25. Observe the installation conditions of the DIBt approval (anchors).