Technical data sheet

TP support / wall and support bracket FT

Item number: 6364683

TP support/bracket for fastening to horizontal concrete ceilings and walls.
If the profile is fastened directly to the ceiling or the profile is screwed together as head reinforcement, then, for reasons of stability, always use the spacer, type DS 4.

St	Steel
FT	Hot-dip galvanised

Master data

Item number	6364683
Type	TPSA 195 FT
Description 1	TP wall and support bracket
Description 2	use as support and bracket
Manufacturer	OBO
Dimension	B195mm
Colour	zinc
Material	Steel
Surface	Hot-dip galvanised
Surface standard	DIN EN ISO 1461
Smallest sales unit	1
Unit of quantity	Piece
Weight	40 kg
Weight unit	kg/100 pc.
CO2 Footprint (GWP) Cradle-to-Gate	0,9428 kg CO2e / 1 Piece

Technical data sheet

TP support / wall and support bracket FT

Item number: 6364683

Dimensions

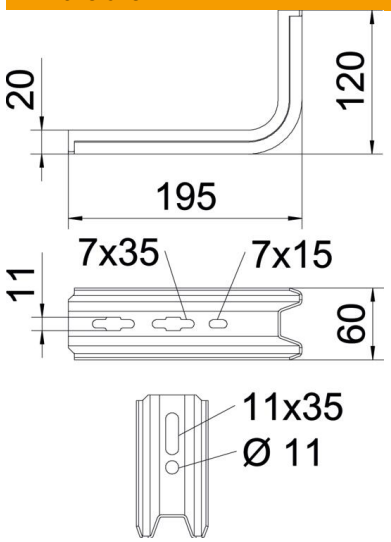

Length	195 mm
Width	60 mm
Height	120 mm
Dimension B	60 mm
Dimension H	120 mm
Dimension L	195 mm

Technical data

Version for	Wall and support bracket
F in kN	1 kN
Maintain electrical functions	no
for width max.	150 mm
for width min.	150
ROHS-conformant	yes
Rustproof steel, pickled	no

Characteristic anchor load values for TP bracket

Wall fastening				
	Max. load [kN]			
	Bracket width [mm]			
Anchor type	145	195	245	345
BZ3 10x90/0-30	1.3	0.93	0.60	0.68

The load capacity values increase considerably when used in uncracked concrete. The stated values are based on cracked concrete of compressive strength C20/25. Please comply with the installation conditions of ETA(anchors).