Technical data sheet

TP wall and ceiling bracket FT

Item number: 6363869

TP wall and ceiling bracket for universal structural fastening.
Important! If the wall and ceiling bracket is fastened directly to the wall or ceiling, then, for reasons of stability, always use the spacer, type DS 4.

Max. side height of the cable support system 60 mm.

TP 35 60

St Steel

FT Hot-dip galvanised

Master data

Item number	6363869
Type	TPD 345 FT
Description 1	Wall and ceiling bracket
Description 2	TP profile
Manufacturer	OBO
Dimension	B345mm
Colour	zinc
Material	Steel
Surface	Hot-dip galvanised
Surface standard	DIN EN ISO 1461
Smallest sales unit	1
Unit of quantity	Piece
Weight	83 kg
Weight unit	kg/100 pc.
CO2 Footprint (GWP) Cradle-to-Gate	1,7466 kg CO2e / 1 Piece

Technical data sheet

TP wall and ceiling bracket FT

Item number: 6363869

Dimensions

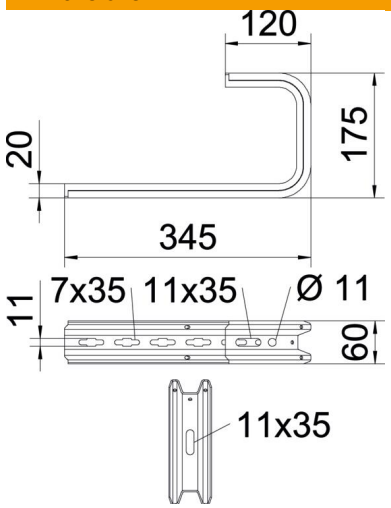

Length	345 mm
Width	345 mm
Height	60 mm
Dimension B	345 mm
Dimension H	175 mm

Technical data

Version for	Suspension bracket (C clamp)
F in kN ceiling	0.5 kN
F in kN wall	0.55 kN
Maintain electrical functions	no
for width max.	300 mm
for width min.	300
Suitable for mesh cable tray	yes
Suitable for cable ladder	yes
Suitable for cable tray	yes
Suitable for tray/ladder width	300 mm
ROHS-conformant	yes

Loads

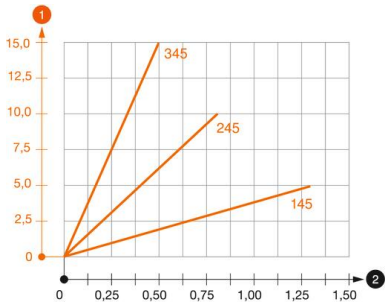

Load diagram, ceiling bracket TPD

1. Bending of the bracket tip at permitted bracket load
2. Permitted bracket load in kN without man load

— Load curve with bracket lengths in mm

Technical data sheet

TP wall and ceiling bracket FT

Item number: 6363869

Characteristic anchor load values for TPD wall and ceiling bracket

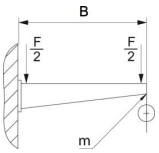

Wall fastening					
	Max. load [kN]				
	Bracket length [mm]				
Anchor type	145	245	345	445	545
BZ3 8x95/0-40	0.56	0.53	0.50	0.47	0.44
BZ3 10x90/0-30	1.03	0.96	0.68	0.54	

Max. total load F = cable weight + cable tray + ceiling bracket. The load capacity values increase considerably when used in uncracked concrete. The values given are based on concrete of strength class C20/25.